BRIGHTWELL

MULTIPLEX 1 PRO

INDUSTRIAL LAUNDRY DOSING SYSTEM (ELECTRIC & PNEUMATIC)

INSTALLATION - SETUP - MAINTENANCE

Revision 2.0
10/2026
B1073US

CONTENTS

GENERAL INFORMATION	3
TECHNICAL INFORMATION	5
MAIN UNIT	7
INSTALLATION AND CONNECTIONS	8
MOUNTING YOUR MULTIPLEX UNIT	10
BOOSTER TANK CONNECTION (OPTIONAL)	14
AIR CONNECTION (PNEUMATIC ONLY)	15
WIRING DIAGRAM	16
WIRING POWER FOR THE MULTIPLEX UNIT	17
MOUNTING YOUR EXPANSION CHANNEL	18
WIRING YOUR EXPANSION CHANNEL	22
PCB CONNECTIONS FOR YOUR SIGNAL BOX	23
SIGNAL BOX CONNECTOR WIRING GUIDE	24
COMMS WIRING SIGNAL BOX	27
CONNECTING YOUR EXTERNAL DISTRIBUTOR	28
CONNECTING AIR TO YOUR PNEUMATIC DISTRIBUTOR	29
SIGNAL WIRING EXTERNAL DISTRIBUTOR	30
ELECTRICAL WIRING SUCTION LANCES	31
CONNECTING YOUR UNIT TO THE INTERNET	32
ELECTRICAL CONNECTION TO EXTERNAL ALARM	33
ELECTRICAL CONNECTION EMERGENCY STOP	34
MACHINE STATUS AND UNIT INFORMATION	35
ALERT INFORMATION	36
REPLACING A VALVE ON YOUR MULTIPLEX SYSTEM	37
MAINTENANCE	39

GENERAL INFORMATION

SAFETY INFORMATION

Wear protective clothing, gloves and safety glasses when installing our equipment or when handling chemicals. Follow the chemical manufacturer's guidelines for safety advice.

During maintenance work, depower the equipment whenever possible. Be aware of possible chemical residues that may remain on the various components of the equipment. Please flush the equipment with water before carrying out any work.
For information on the products used in this dispensing equipment, refer to the product label and the appropriate Material Safety Data Sheet (MSDS).

Caution! Risk of high voltage electric shock.

Electrical installation should only be carried out by trained personnel and in accordance with local electrical wiring regulations. Disconnect power to the unit and isolate it from any electrical source before servicing.

Do not supply power outside the limits indicated on the rating plate.

Please earth the safety equipment as this increases the dispenser's resistance to electrical noise.

Do not use damaged or frayed cables and prevent this from happening by using, when necessary, protective elements (cable glands, conduits, etc...).

The installation of the metering unit must be carried out according to the instructions in this manual.

Do not fix the unit on an unstable, uneven or non-vertical surface. Make sure that the different elements are well anchored. Do not place heavy objects on them.

This equipment works in a vertical position, with the control cabinet at the top left and the chemical products underneath the equipment. Do not install it in other positions.

Do not disassemble or modify this equipment, at the risk of losing the possibility of warranty. Replacement of components (pumps, pipes, valves,...) or modification of the system must only be carried out by qualified personnel.

Avoid running the system dry as this may cause damage to the dosing pump(s).

Always ensure that chemicals are handled with care and that the dosing equipment area is adequately ventilated.

Do not reach into the mechanisms

GENERAL INFORMATION

GUARANTEE

Your product comes as standard with a 2 year warranty from the date of manufacture, against manufacturing fault or defects and mechanical or electrical breakdown. Please visit our website for full terms and conditions.
www.brightwell-inc.com

MULTIPLEX

Multiplex is part of the Brightwell proposal for the dosing of chemical products in industrial laundries and is designed to serve any laundry with a maximum of **12 washing machines (depending on setup).**

Multiplex is a single-pump unit, with an electric diaphragm pump and is designed for a maximum of **8 products**. It is possible to extend its capacities by adding additional panels with pump and suction to be able to dose more products and with simultaneous pumps.

The design of the equipment is based on the parameters that govern the entire Multiplex range:

Technical**:** Industrial design and conception, with the integration of mechanical, electrical and electronic components conceived for continuous tasks and routines.

Flexible**:** it can be configured and controlled, "in situ" or remotely, from any device, without the need for special applications or programmes.

Secure**:** Only company-authorised users have access to the equipment, defined by levels and with possible limitation of functions.

Reliable**:** Control elements and tools -software and hardware- to enable the precision required for dosing in industrial laundries.

Accurate**:** Recording of all data to obtain detailed statistics for a correct analysis of consumption, costs, alarms, performance, and production allowing the prognosis and anticipation of possible problems.

Efficient**:** With routines -software- and elements -hardware- that seek your best performance and effectiveness.

TECHNICAL INFORMATION

UNIT

MULTIPLEX 1 PRO ELECTRIC
(MAIN UNIT)

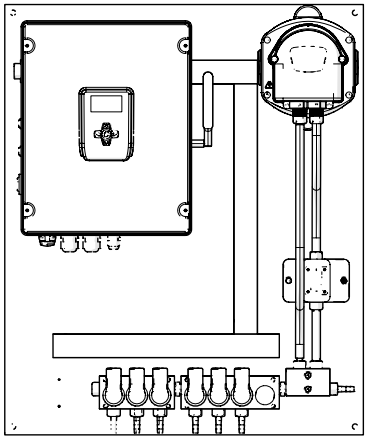

MULTIPLEX 1 PRO PNEUMATIC
(MAIN UNIT)

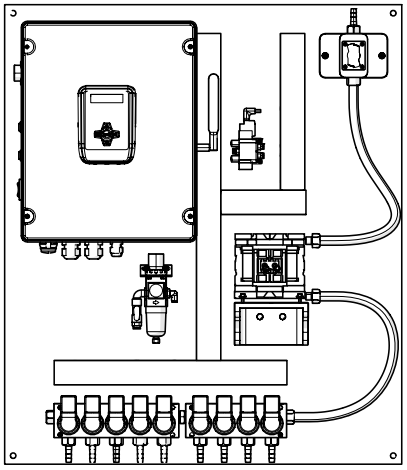

ACCESSORIES

MULTIPLEX
SIGNAL BOX

TECHNICAL INFORMATION

ACCESSORIES

MULTIPLEX
EXPANSION CHANNEL (ELECTRIC)

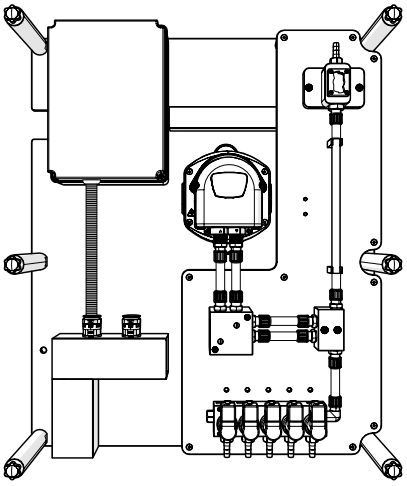

MULTIPLEX
EXPANSION CHANNEL (PNEUMATIC)

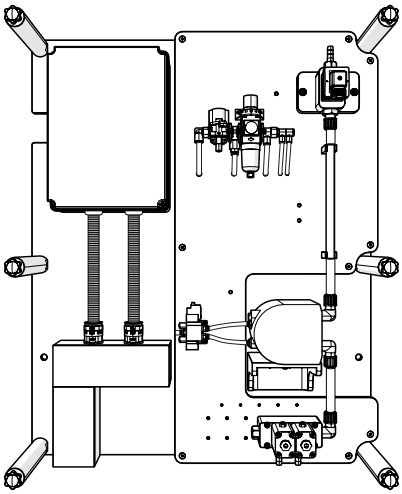

MULTIPLEX
SUCTION ROD

MULTIPLEX
DISTRIBUTOR (PNEUMATIC)

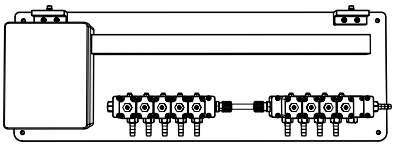

MULTIPLEX
DISTRIBUTOR (ELECTRIC)

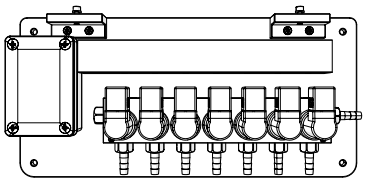

*Brightwell recommends the use of accessories designed to work with Multiplex equipment. Please ask our sales department for more details on these products.

MAIN UNIT

The Multiplex main unit consists of a control cabinet, a battery of solenoid valves for water flow and product suction, a diaphragm or pneumatic pump and a flow confirmation sensor.

ELECTRIC

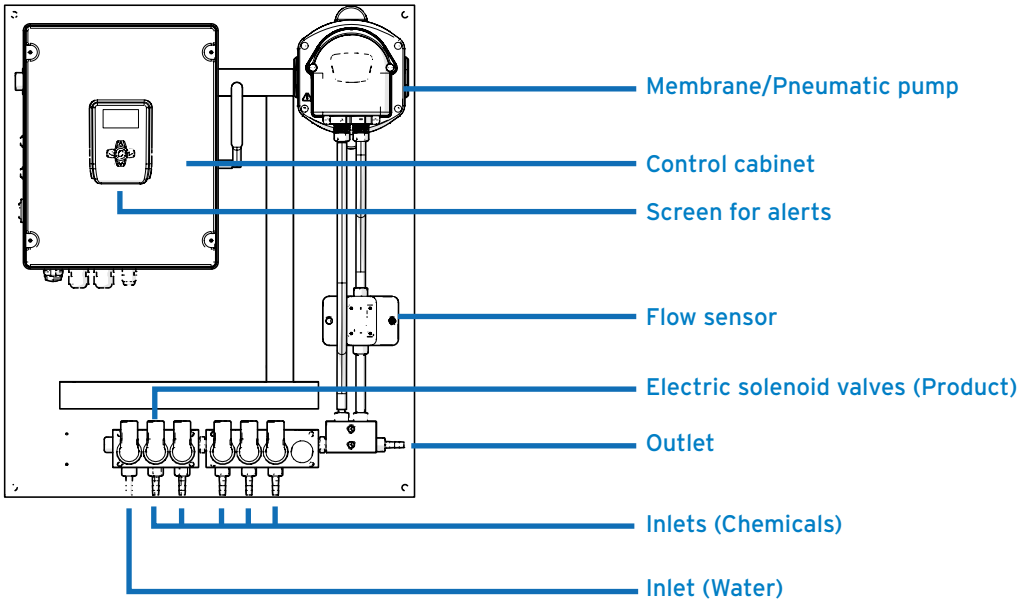

PNEUMATIC

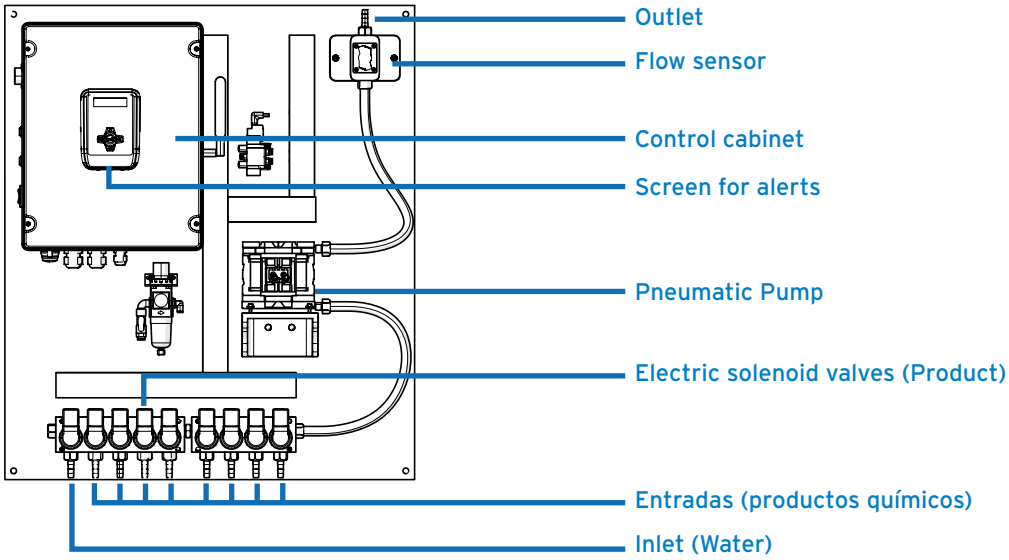

DISTRIBUTOR

This is the element that completes the "dosing channel". Its task is to direct, by opening the appropriate solenoid valve, the chemical products to the target washer.
The distributor also has a solenoid valve that facilitates the correct calibration of the products as it takes into account the pressure loss due to the distance and all the restrictions to which the fluid is subjected.
To simplify installation and whenever possible, it is advisable to place the distributor close to the washing machines.

SIGNAL BOXES

This is the element used to collect the signals from the washers and send them to the system. We will use one signal box for each washing machine. The recommended location is on a plain wall near each washing machine.

INSTALLATION AND CONNECTIONS

INTRODUCTION

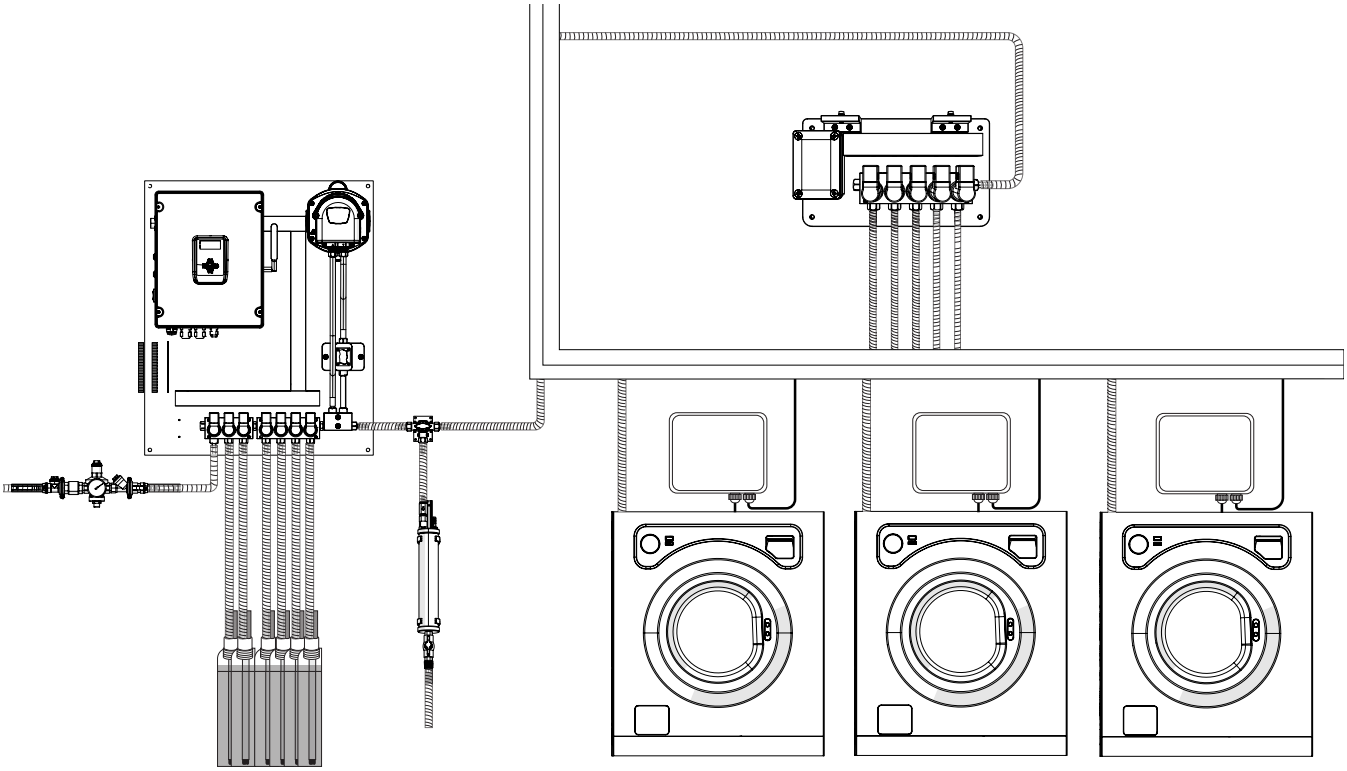

This image reproduces the 'Standard' setup of a Multiplex unit with one channel and an external distributor (your setup will vary based on model), understanding "Channel" as a group of products that are injected into the same manifold and directed to a distributor (washing machines) or an injection (tunnel).

For the installation and commissioning of Multiplex, we recommend that you strictly follow the following "step by step" to avoid any issues. In the following sections, the individual points will be explained in detail.

Check that you have all the material, equipment and accessories. Check that everything is in good condition.

1. Lay out the installation and fix all the elements - equipment, distributor, communication boxes and the necessary installation material - to the wall.
2. Install pipes and cables using cable ties to ensure that they are securely fastened to avoid pressure surges.
3. Check the product piping to avoid any possible chokes that could cause an inconvenient flow of the product.
4. Connect all electrical cables - using ferrules, if possible - and all pipes - using metal clamps.
5. Install electricity and water supplies (and air, if required).
6. Communication: Check all communication box connections, configure each box and selector to identify which washer they correspond to. Disconnect the communication connectors leaving only the first box connected.
7. Check, before raising the circuit breaker, with a multimeter that the incoming voltage is 110-240 VAC / 50-60Hz.
8. Supply power to the equipment and open the water supply (and air supply, if required).
9. Check that the supplies are adequate in terms of pressure and flow.

INSTALLATION AND CONNECTIONS

FIXING OF EQUIPMENT AND ACCESSORIES

Before beginning installation, ensure you have all necessary items and inspect them for any damage. Should you find any missing or defective components, refrain from installing them, as doing so could create a hazardous situation and void the warranty. Instead, return the equipment to the dealer in its original packaging. Installation of this system should only be carried out by qualified personnel in accordance with local regulations.

Identify a smooth, flat surface near the washing machines for installation. It's crucial to note that suction points **should not exceed 5 meters**, thus requiring sufficient space near the chosen point and below where the equipment will be mounted.

Avoid using elements from existing installations for new wiring. We recommend utilising the material kits provided by Brightwell; consult our sales department for assistance. Regardless, all materials used must meet the specifications outlined in this manual.

Begin by securely fixing the equipment to the wall, ensuring it is positioned vertically and level. Then mount the communication boxes, placing one near each corresponding washing machine.

Exercise caution when fixing channels for pipe transportation to prevent excessively sharp bends.

MOUNTING YOUR MULTIPLEX UNIT

STEP 1

Take your Multiplex unit and place it up against the surface you want to mount it to.
Please note: This unit is heavy and requires two people to safely lift and hold.

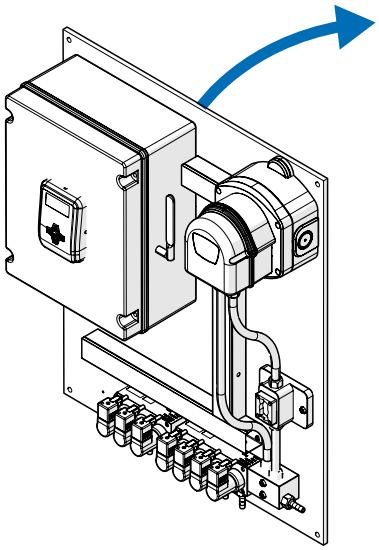

STEP 2

Mark the 4 drilling holes with a pen or similar device.

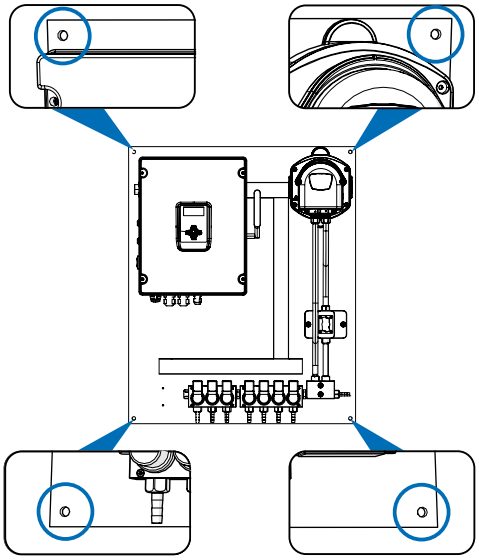

STEP 3

Remove the Multiplex unit from the wall and place in a safe location.

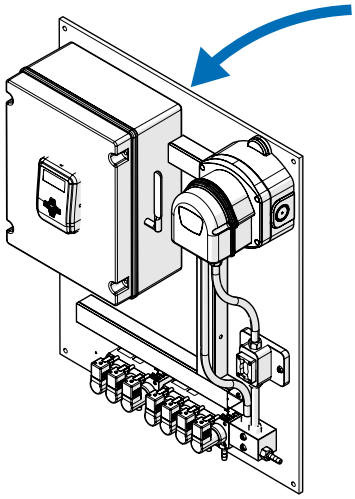

MOUNTING YOUR MULTIPLEX UNIT

STEP 4

Use a **6 mm drill bit** to make a **40 mm** hole for each mark.

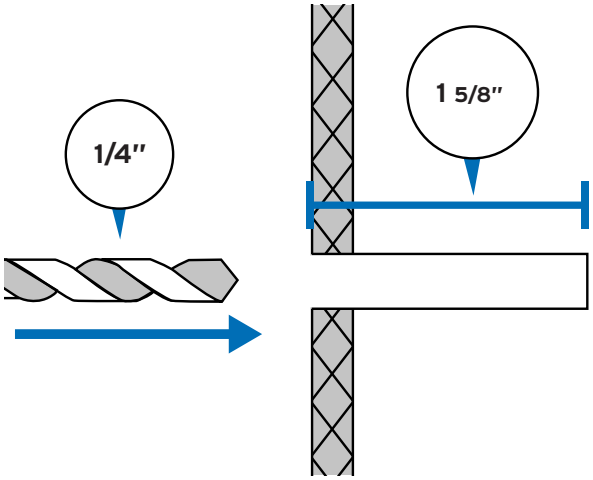

STEP 5

Place the wall plugs into the holes you created and use a mallet or similar device to drive flush.

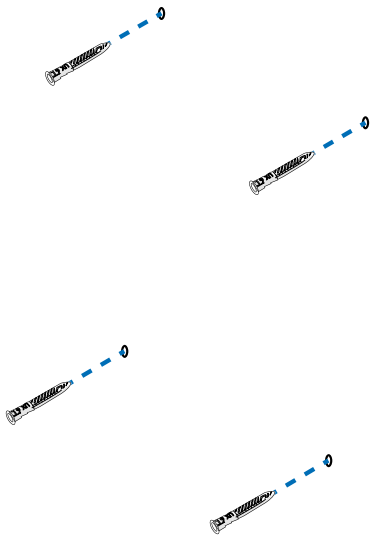

STEP 6

Place your Multiplex on the wall and hold in place over the mounting holes. Use the washers and M8 screws provided to attach to the wall.

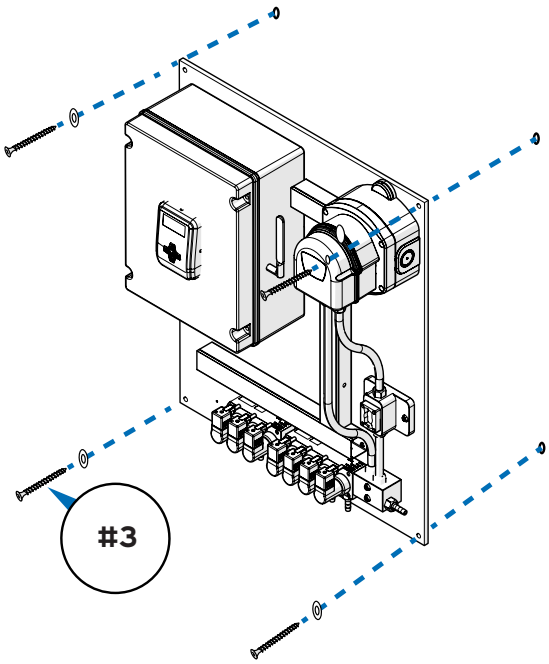

CHEMICAL CONNECTION

UNIT - DISTRIBUTOR - WASHING MACHINE CONNECTIONS EXTERNAL DISTRIBUTOR

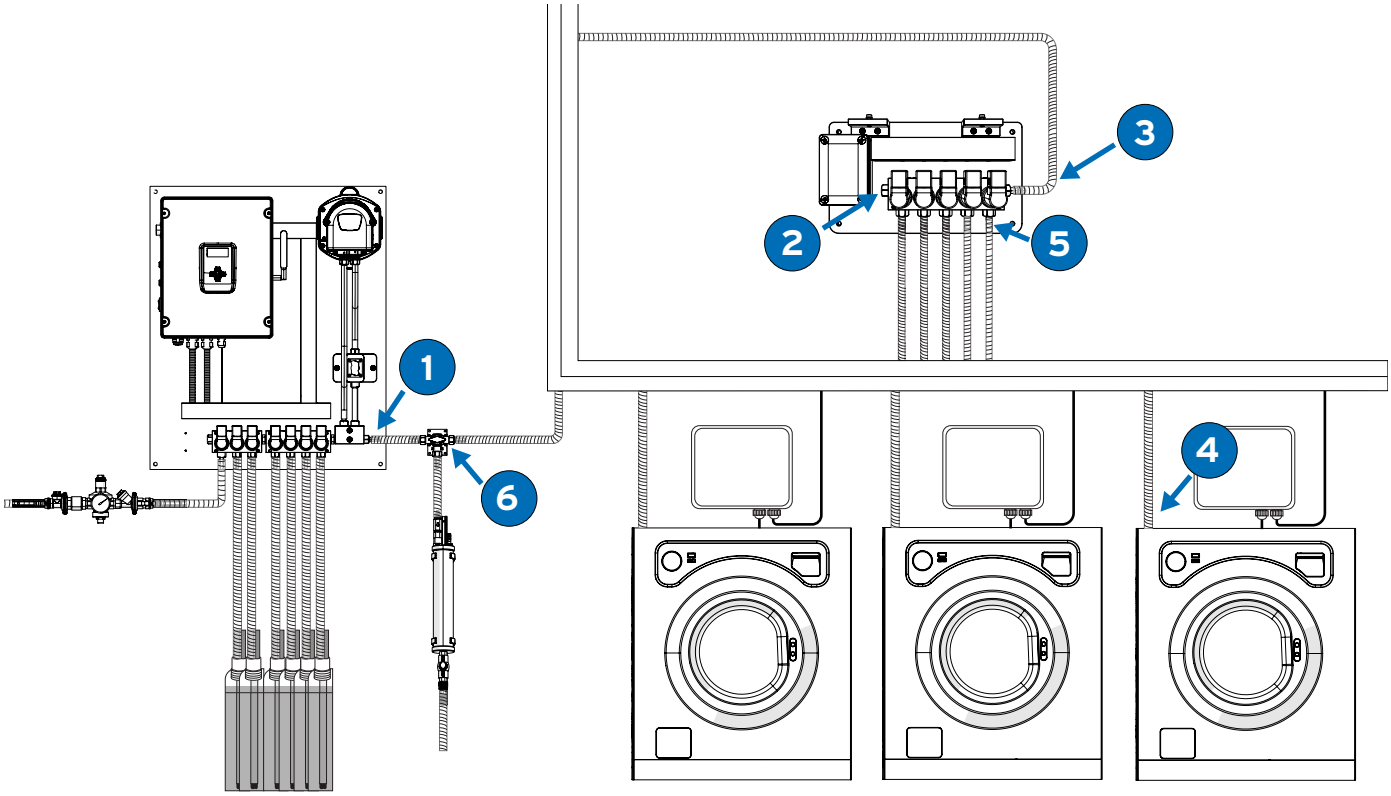

To connect equipment, distributor and washers, use **3/8" ID x 1/2" OD braided PVC** pipe and stainless steel clamps.

1. Connect the outlet of the meter
3. with the inlet of the distributor
2. connect the outlets to the washing machines of the distributor
4. with the connection that each washing machine has for the chemical products
5. reserve the last solenoid valve
6. for the calibration system if you are not using a calibration vase.

It is essential that the tube cannot be throttled. Place it in a channel where it lies flat and cannot hang down.

CHEMICAL CONNECTION

WATER CONNECTION

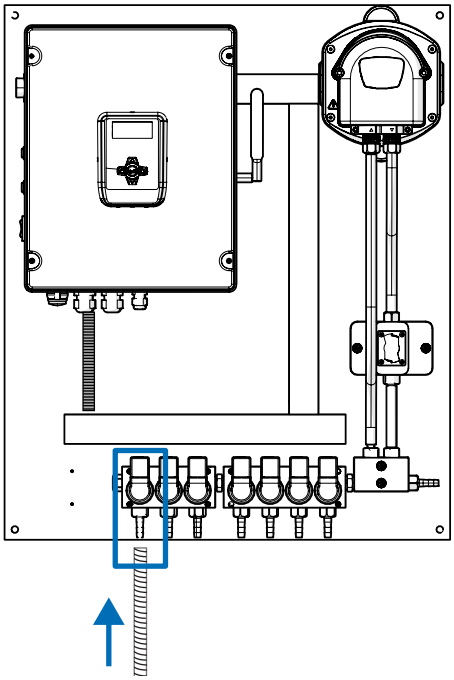

Connect the water supply to the water inlet connection seen on the unit here.
Use **3/8" ID x 1/2" OD braided PVC pipe** and stainless steel clamp.

Please note that the unit requires a flow rate of **68 fl oz/min (min) and 338 fl oz per/min (max) and a dynamic pressure range of 22 PSI (min) to 43 PSI (max).**
We recommend the installation of a press-control to guarantee operation and/or a pressure regulator if there is a possibility that the operating pressure may be too high.
Please note – This must be connected to INLET 1 only

CHEMICAL CONNECTIONS

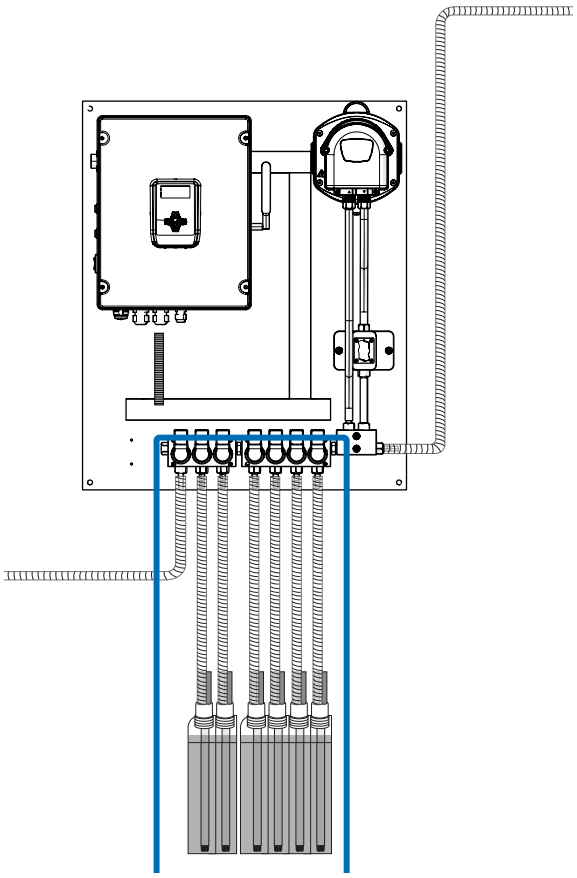

Connect the various suction nozzles to the solenoid valves on the central panel using **3/8" ID x 1/2" OD braided PVC pipe.**
Use stainless steel clamps for this purpose.

PLEASE NOTE – Inlet 1 is the water connection ONLY
Product 1 is connected to inlet 2
Product 2 is connected to inlet 3
etc.

BOOSTER TANK CONNECTION (OPTIONAL)

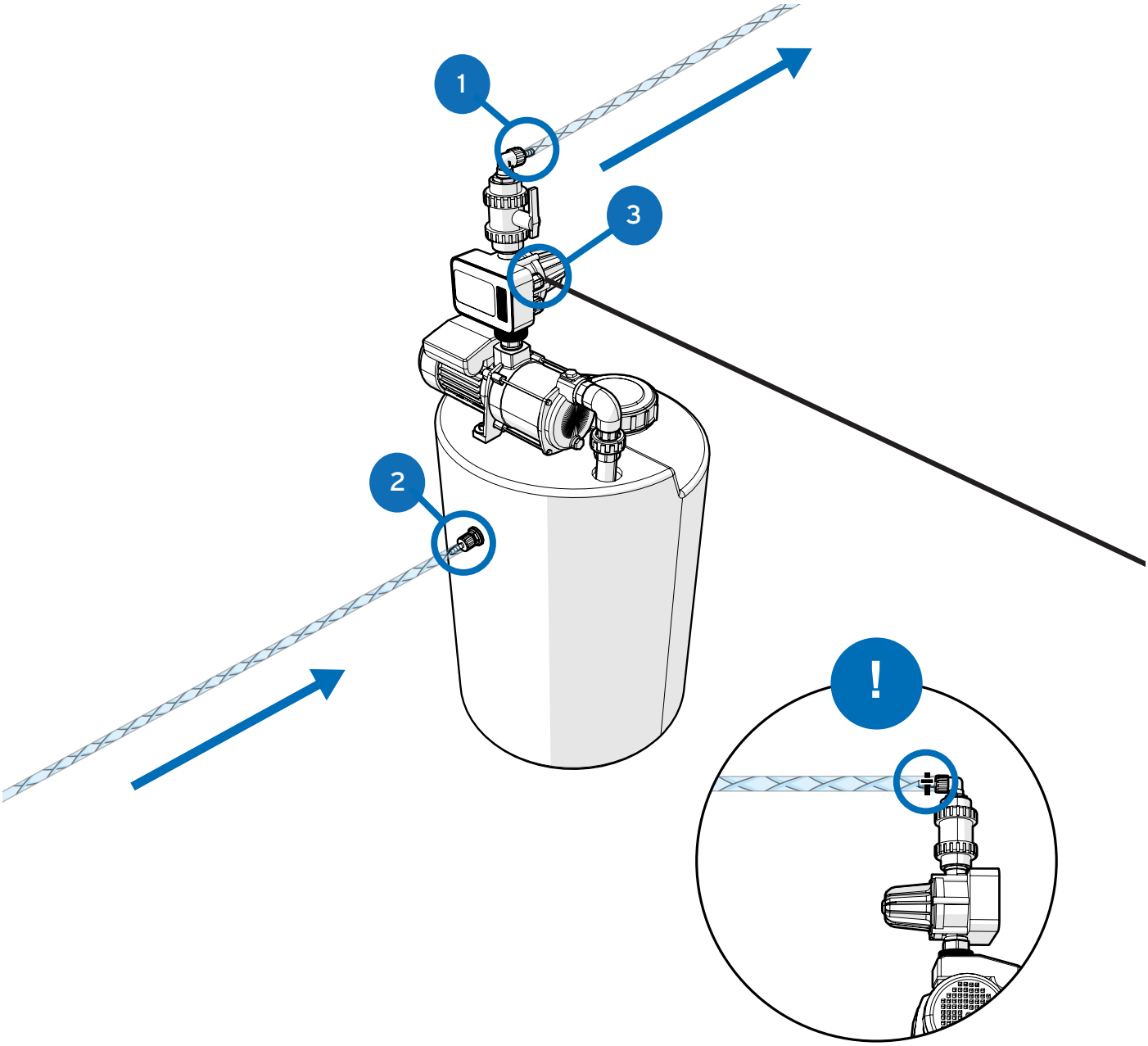

Please note that the unit requires a flow rate of **min 68 fl oz per min - max 339 fl oz per min** and a dynamic pressure range of **28 PSI (min) - to 44 PSI bar (max).**. A booster tank is recommended whenever a consistent supply is not available.

Use zip ties or hose clamps on all water connections to avoid leads.

Please note - If you do not use a booster tank performance values can not be guaranteed by Brightwell.

No.	Description
1	Water Outlet 3/8" (44 PSI regulated)
2	Water Inlet 3/8"
3	110 - 240 v Pump Input

AIR CONNECTION (PNEUMATIC ONLY)

AIR INLET CONNECTION

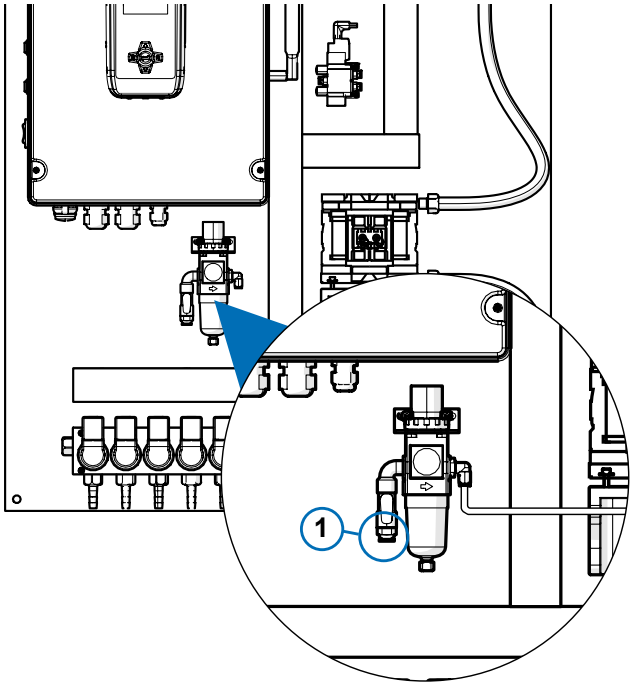

There are 3 connectors located on the underside of the control panel related to air on the Multiplex 1 Pro. You only need to connect the one labelled **1**.

1 - Distributor Air Inlet 8mm

The recommended working pressure is **4 bar with an average consumption of 140 l/m**.

WIRING DIAGRAM

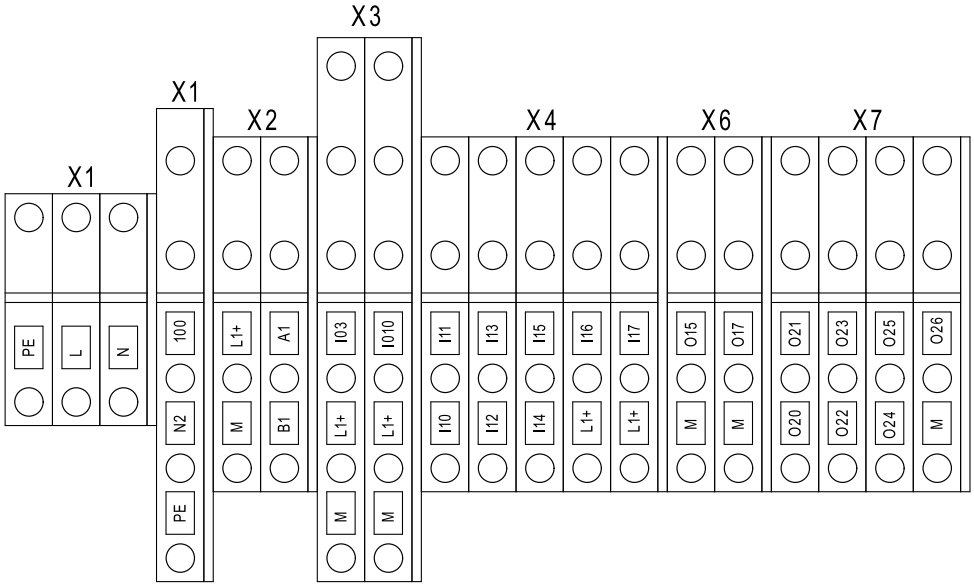

X1	Description
PE	GROUND/EARTH
L	LIVE
N	NEUTRAL

X4	Description
I10	SUCTION ROD 1
I11	SUCTION ROD 2
I12	SUCTION ROD 3
I13	SUCTION ROD 4
I14	SUCTION ROD 5
I15	SUCTION ROD 6
I16	SUCTION ROD 7
I17	SUCTION ROD 8

X6	Description
017	EXTERNAL ALARM 24V+
M	EXTERNAL ALARM 0V-

X7	Description
020	WASHER DISTRIBUTOR VALVE 1
021	WASHER DISTRIBUTOR VALVE 2
022	WASHER DISTRIBUTOR VALVE 3
023	WASHER DISTRIBUTOR VALVE 4
024	WASHER DISTRIBUTOR VALVE 5
025	WASHER DISTRIBUTOR VALVE 6
026	MEASURING VASE

WIRING POWER FOR THE MULTIPLEX UNIT

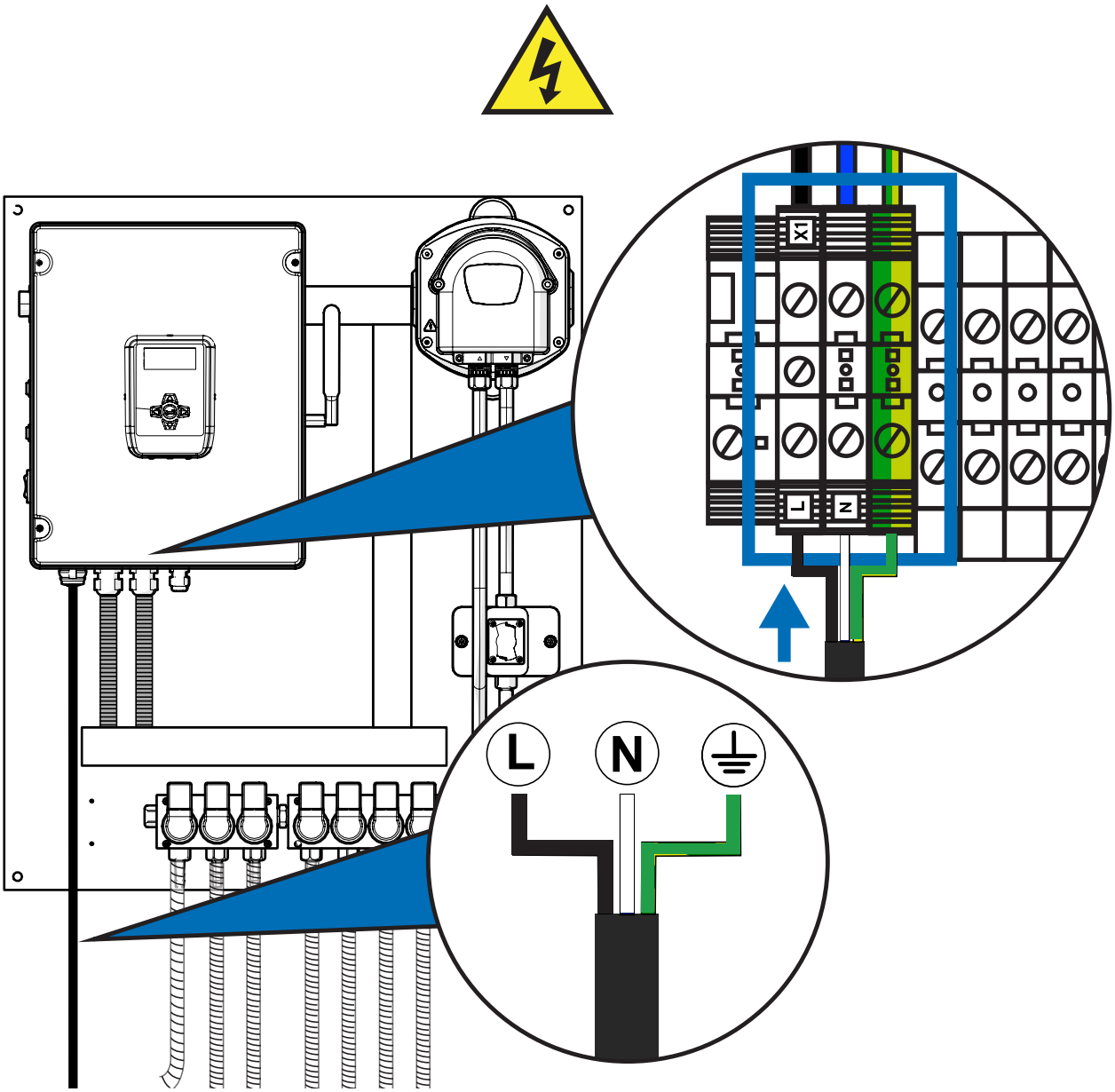

For the power supply of the equipment you must use **3x16 AWG cable**. Insert the cable through the channel located at the bottom left and use one of the cable glands to insert it safely inside the control cabinet. Connect to the terminals identified with **X1** found on the lower left of the connections.
The power supply must be suitably protected. Use a specific line for the power supply of the equipment.

MOUNTING YOUR EXPANSION CHANNEL

STEP 1

For the Electric channel, place on the wall and mark the mounting holes, alternatively for the pneumatic unit place the wall hooks against the surface. Space them approximately **620mm** apart and mark the wall through the holes.

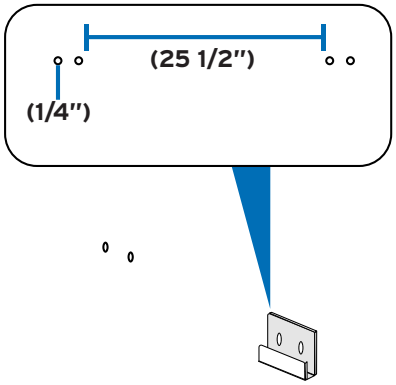

STEP 2

Use a **6mm** drill bit to drill a **50mm** hole into the wall where you marked previously.

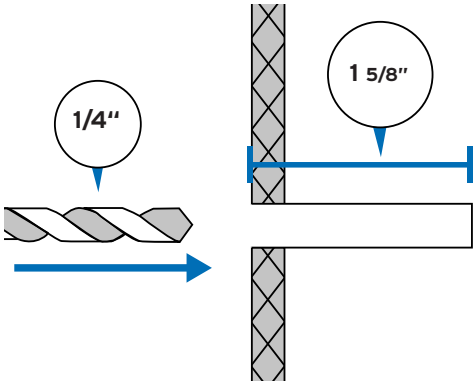

STEP 3

Use a **6mm Pozidriv** screwdriver to attach the mounting hooks onto the wall.

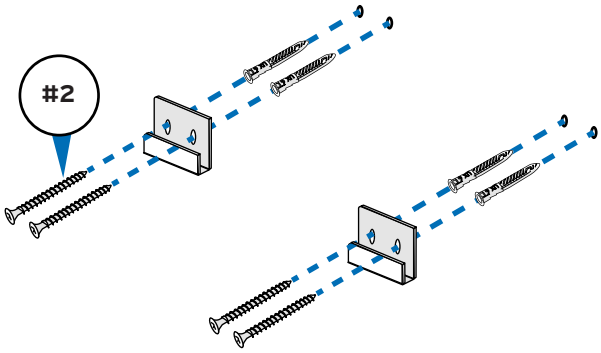

STEP 4

CAUTION: This product is heavy and requires two or more individuals for safe installation. Follow all heavy lifting procedures to ensure your safety.

Lift your unit and use the hooks attached to the wall to mount it securely.

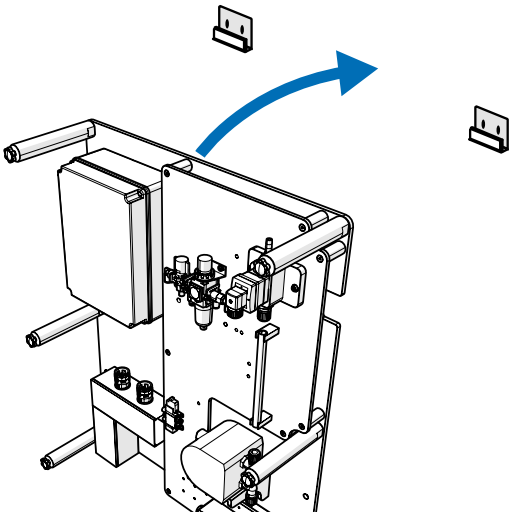

MOUNTING YOUR EXPANSION CHANNEL

STEP 5

Confirm that the Expansion Channel is securely attached to the mounting hooks before releasing it.

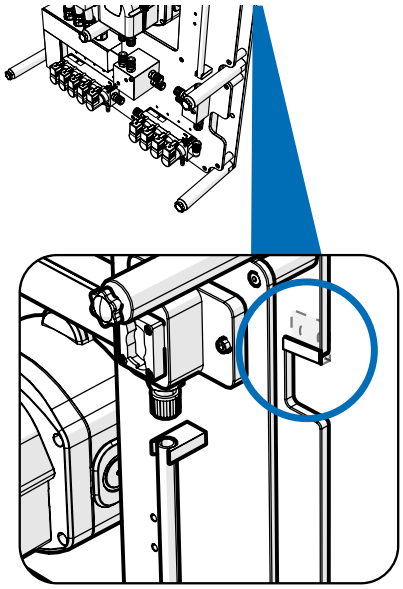

STEP 6

Mark the main mounting holes located on either side of the unit here using a pen or similar device.

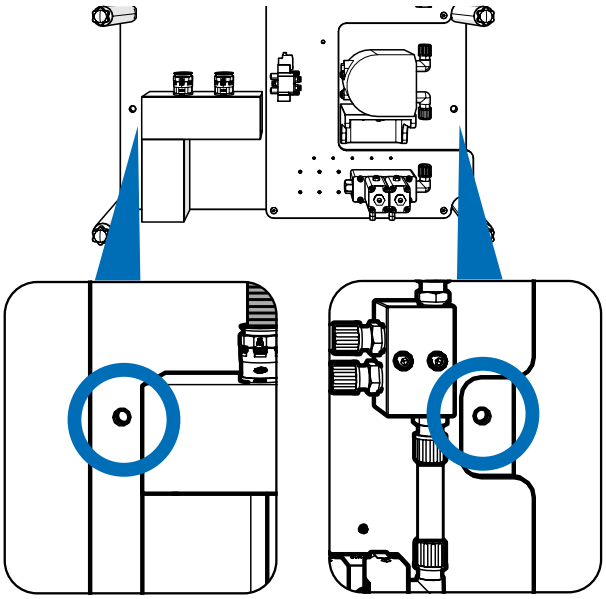

STEP 7

Safely remove the Expansion Channel and use an **8mm** drill bit to drill a **70mm** hole into the wall where you marked previously.

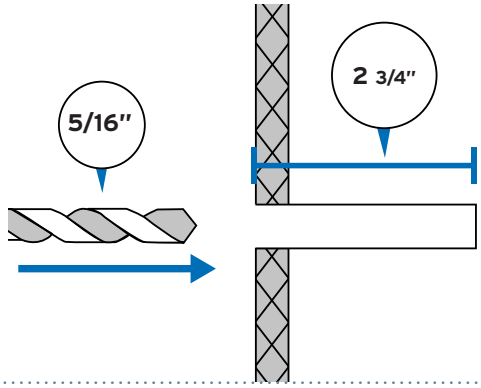

MOUNTING YOUR EXPANSION CHANNEL

STEP 8

Insert the wall plugs into the holes you drilled.

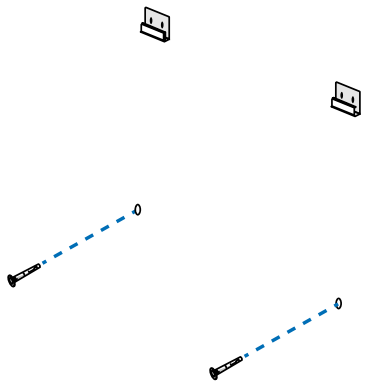

STEP 9

Place the screws into the mounting holes and secure them with an **8mm** hex bolt.

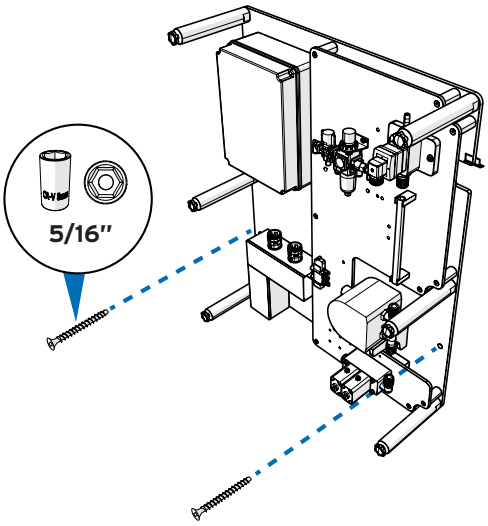

MOUNTING YOUR EXPANSION CHANNEL

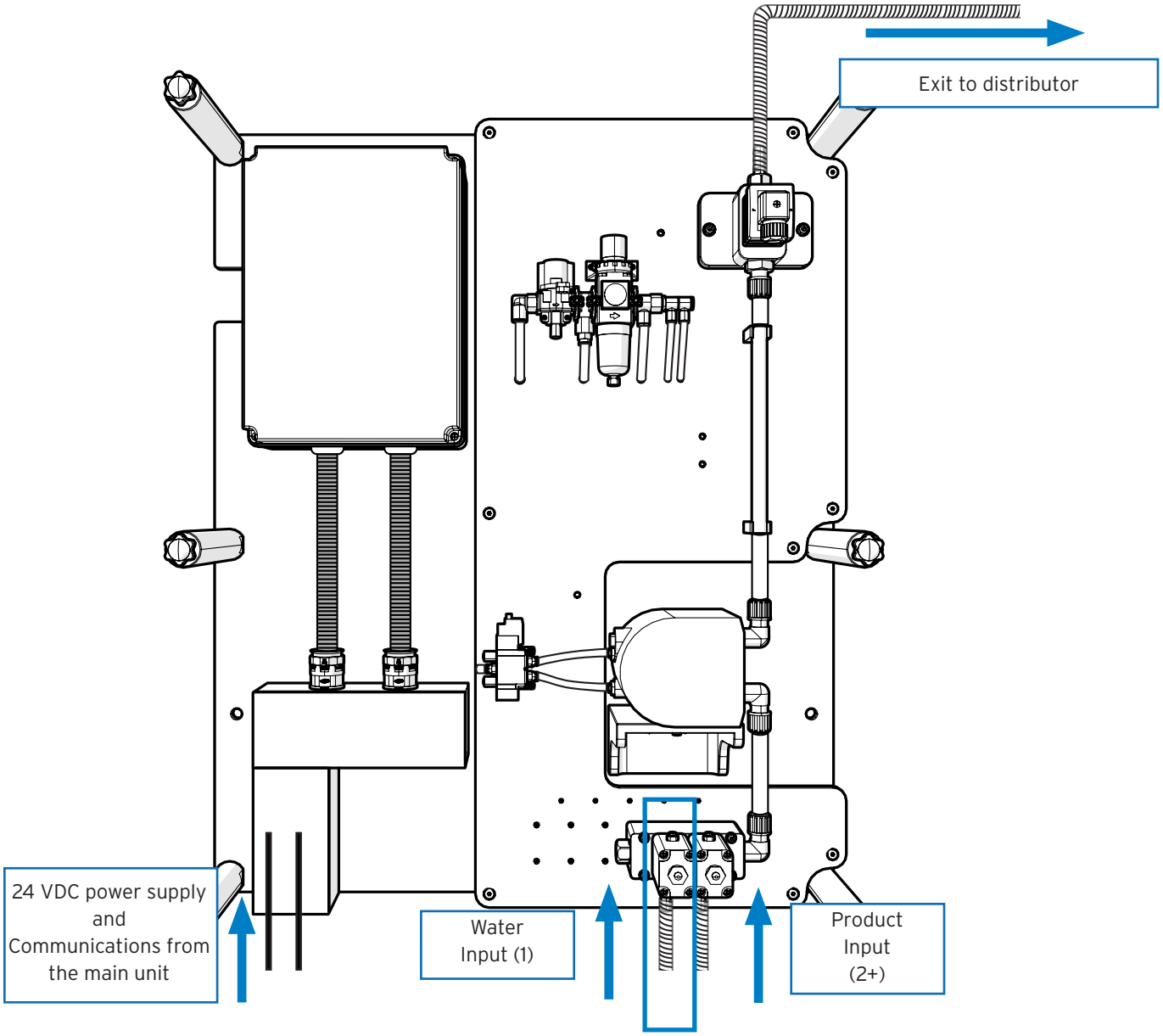

WIRING YOUR EXPANSION CHANNEL

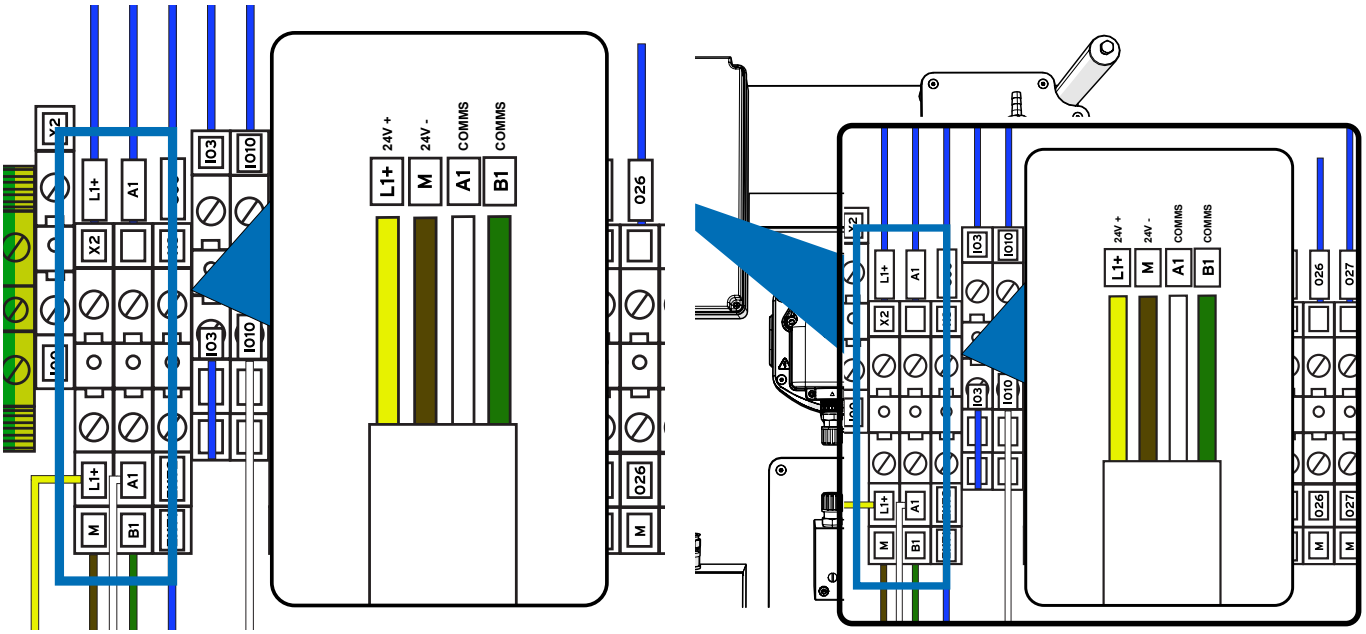

To connect the expansion channel to the unit, connect **X2** on the main machine to **X1** on the expansion channel.

No.	Description
L1+	24 V +
M	24 V -
A1	COMMS A
B1	COMMS B

No.	Description
1	24 V +
2	24 V -
3	COMMS A
4	COMMS B

PCB CONNECTIONS FOR YOUR SIGNAL BOX

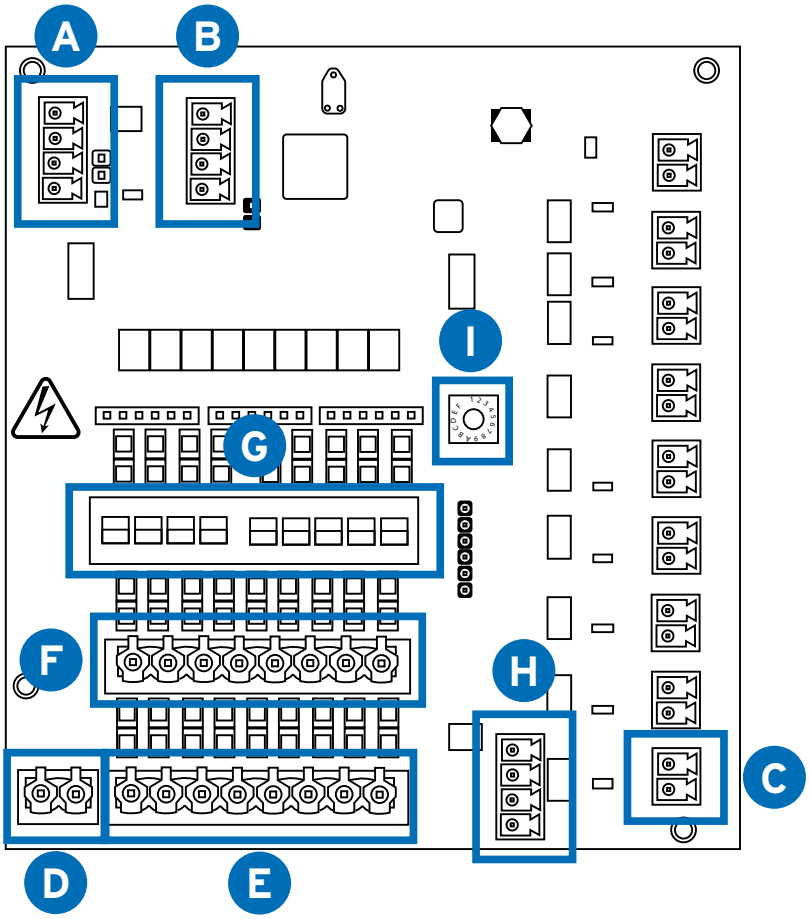

Connector	Description
A	COMMS IN
B	COMMS OUT
C	MACHINE PAUSE
D	COMMON NEUTRAL *
E	SIGNAL/TRIGGER INPUTS *
F	ISOLATED NEUTRAL *
G	COMMON OR ISOLATED DIP SWITCH SELECTOR
H	FORMULA SELECT CONNECTOR
I	MACHINE NUMBER ROTARY SELECTOR *Please turn the rotary dial to the machine number in the setup. IE. Number 1 = Machine 1 Number 2 = Machine 2

* For the connection between the signal box and laundry machine, you'll need to provide a cable with the correct number of conductors for both signal and neutral transmission.

SIGNAL BOX CONNECTOR WIRING GUIDE

A

COMMS IN

(From the main dosing unit to the signal box)

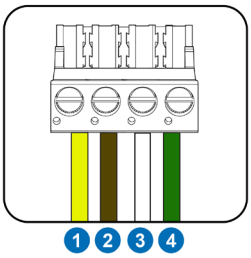

No.	Description
1	24 V +
2	24 V -
3	COMMS A
4	COMMS B

B

COMMS OUT

(To the next signal box in the chain)

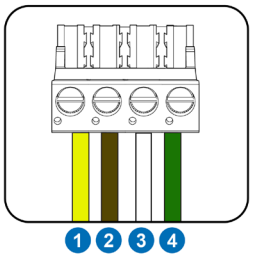

No.	Description
1	24 V +
2	24 V -
3	COMMS A
4	COMMS B

C

VALVE OUTPUTS

(24 VDC)

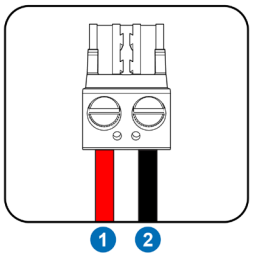

No.	Description
1	24 V +
2	24 V -

D

COMMON NEUTRAL *

(Common neutral input)

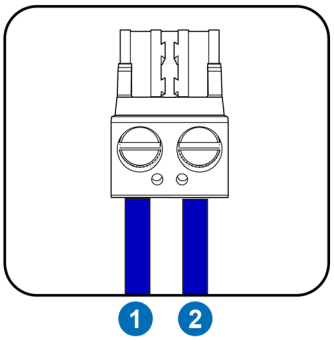

No.	Description
1	COMMON NEUTRAL
2	COMMON NEUTRAL

E

SIGNAL/TRIGGER INPUTS *

(Signal inputs from machine)
(24 - 240 VDC)

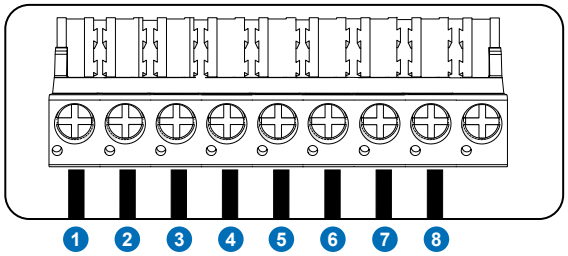

No.	Description
1	SIGNAL/TRIGGER INPUT 1
2	SIGNAL/TRIGGER INPUT 2
3	SIGNAL/TRIGGER INPUT 3
4	SIGNAL/TRIGGER INPUT 4
5	SIGNAL/TRIGGER INPUT 5
6	SIGNAL/TRIGGER INPUT 6
7	SIGNAL/TRIGGER INPUT 7
8	SIGNAL/TRIGGER INPUT 8

SIGNAL BOX CONNECTOR WIRING GUIDE

F

ISOLATED NEUTRAL INPUTS *

(Neutral inputs for isolated signals)
(24 - 240 VDC)

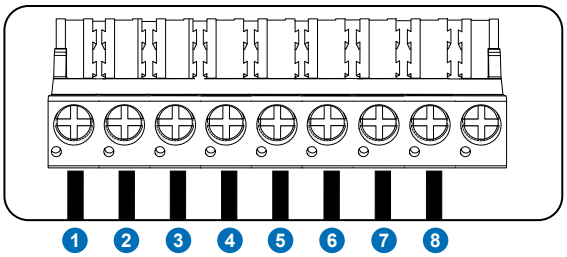

No.	Description
1	ISOLATED NEUTRAL SIGNAL INPUT 1
2	ISOLATED NEUTRAL SIGNAL INPUT 2
3	ISOLATED NEUTRAL SIGNAL INPUT 3
4	ISOLATED NEUTRAL SIGNAL INPUT 4
5	ISOLATED NEUTRAL SIGNAL INPUT 5
6	ISOLATED NEUTRAL SIGNAL INPUT 6
7	ISOLATED NEUTRAL SIGNAL INPUT 7
8	ISOLATED NEUTRAL SIGNAL INPUT 8

H

FORMULA SELECT INPUT

(Formula Select Input)

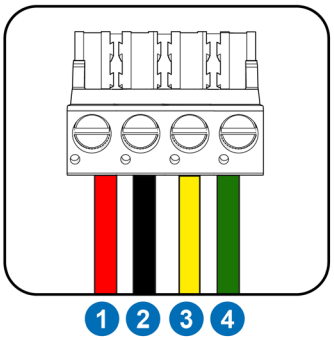

No.	Description
1	24 V +
2	24 V -
3	COMMS A
4	COMMS B

SIGNAL BOX CONNECTOR WIRING GUIDE

DIP SWITCH CONFIGURATION AND SETUP

To configure the neutral connections, utilise the dip switches positioned above the signal inputs. Set the dip switch to either the **COMMON** or **ISOLATED** position as required. For isolating a trigger signal, move the dip switch to the **TOP** position. Conversely, if it shares a common neutral, move it to the **BOTTOM** position. Here's an example:

Trigger 1: Isolated - Dip switch 1 set to **TOP**
Trigger 2: Common - Dip switch 2 set to **BOTTOM**

DIAGRAM

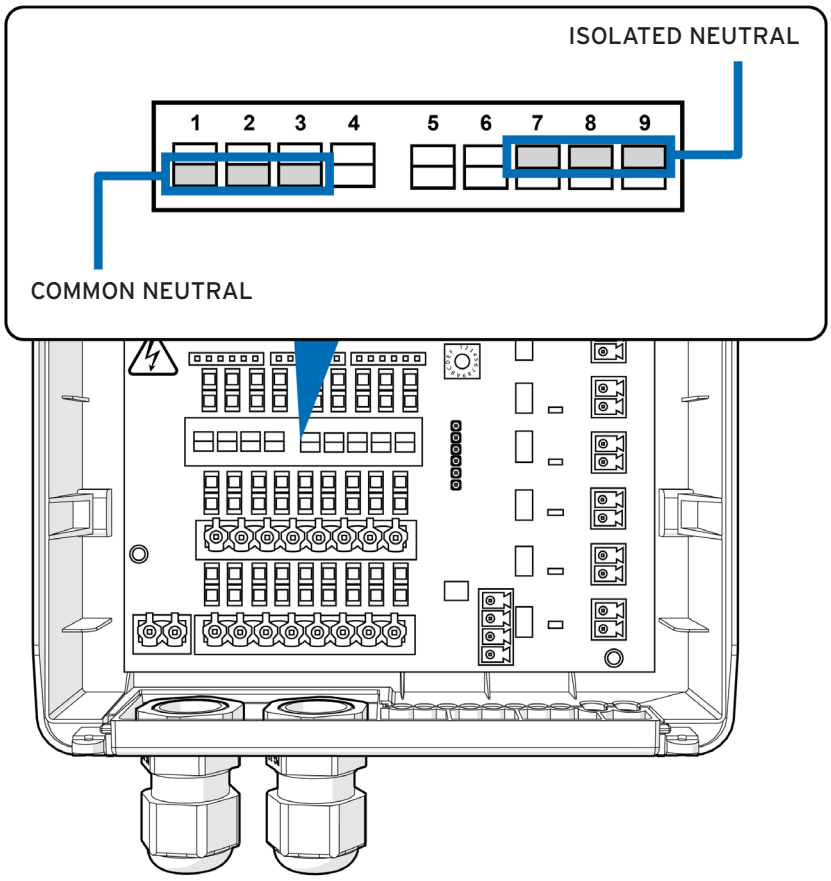

COMMS WIRING SIGNAL BOX

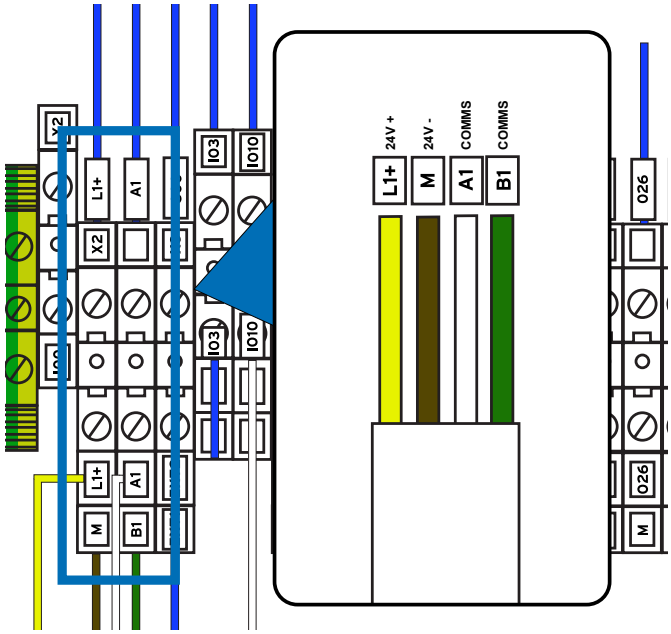

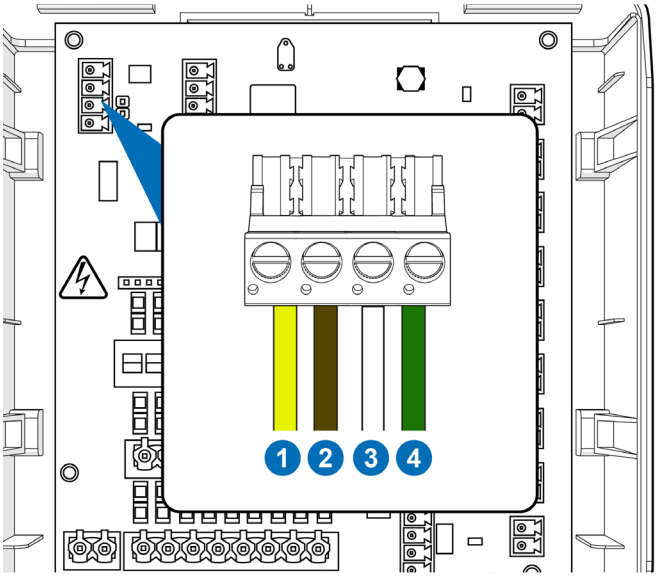

To connect the external communication box to the unit, connect terminal **X2** on the main machine to terminal **X1** on the communication box.

No.	Description
L1+	24 V +
M	24 V -
A1	COMMS A
B1	COMMS B

No.	Description
1	24 V +
2	24 V -
3	COMMS A
4	COMMS B

CONNECTING YOUR EXTERNAL DISTRIBUTOR

STEP 1

To mount your external distributor unit, please remove the cover using a **6mm** hex bolt.

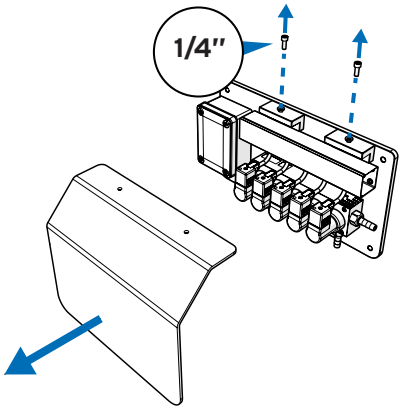

STEP 2

Place the external distributor on the surface where you want to mount it. Use a pen or similar device to mark the mounting holes.

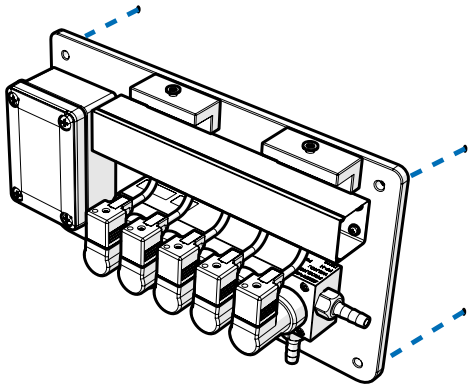

STEP 3

Use a **6mm** drill bit to drill a **50mm** hole into the wall where you marked previously.

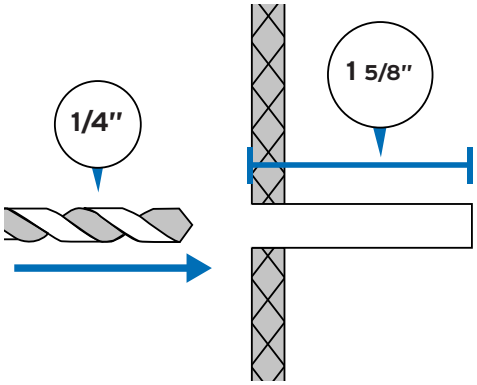

STEP 4

Position the external distributor on the desired surface for mounting. Then, use a **6mm Pozidriv screwdriver** to attach to the wall.

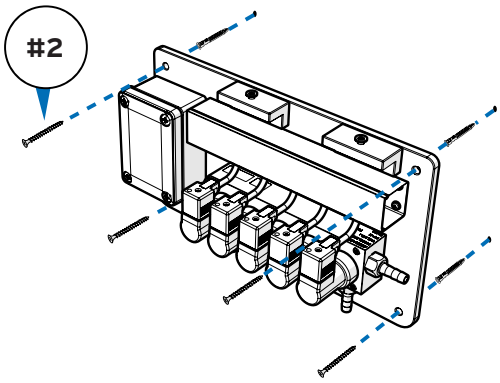

CONNECTING YOUR EXTERNAL DISTRIBUTOR

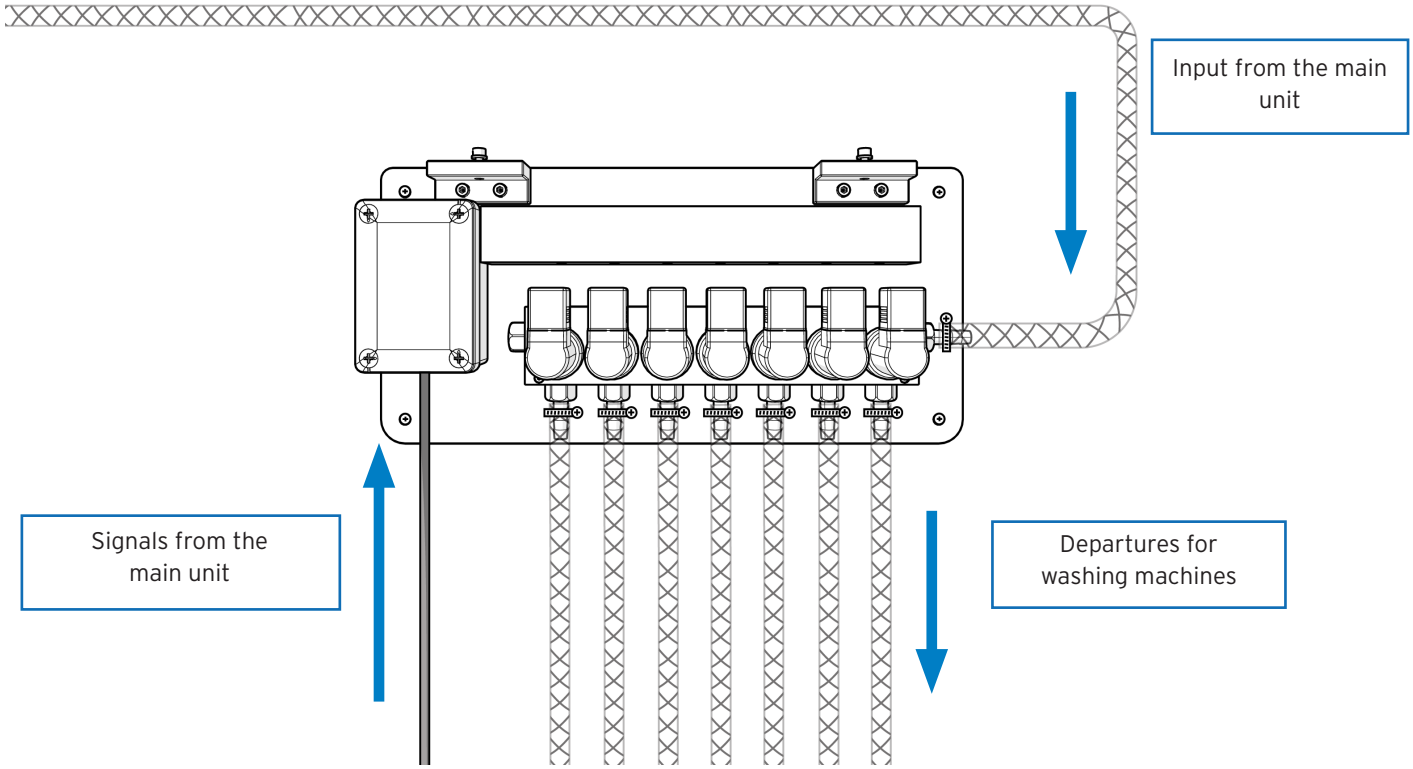

CONNECTING AIR TO YOUR PNEUMATIC DISTRIBUTOR

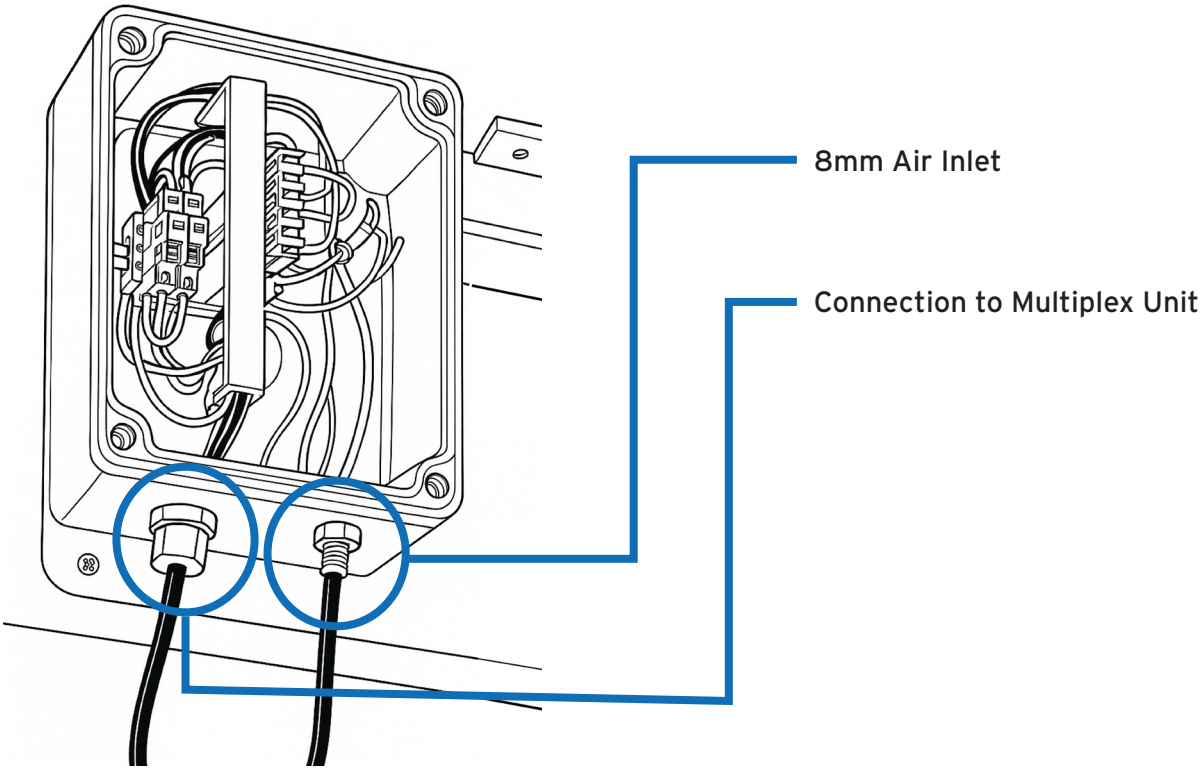

SIGNAL WIRING EXTERNAL DISTRIBUTOR

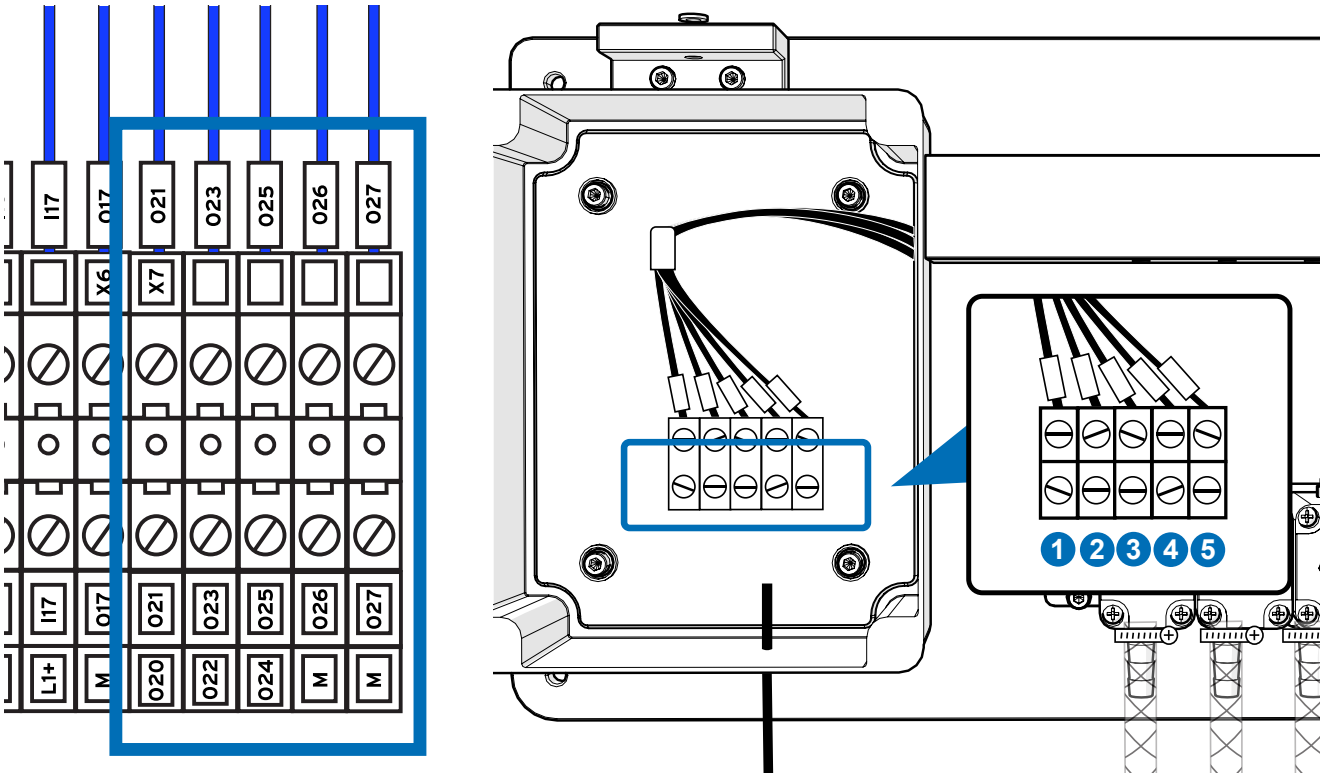

Use a **7x18 AWG cable** cable for the connection between the control cabinet and the distributor. Connect the distributor to terminal block **X7**. Each terminal connection corresponds to the outlets numbered from left to right, with the number dependent on the order. Below is the wiring diagram for the main unit.

Number	Machine Number
020	MACH 1
021	MACH 2
022	MACH 3
023	MACH 4
024	MACH 5
025	MACH 6
026	MEASURING VASE
027	PNEUMATIC PUMP

ELECTRICAL WIRING SUCTION LANCES

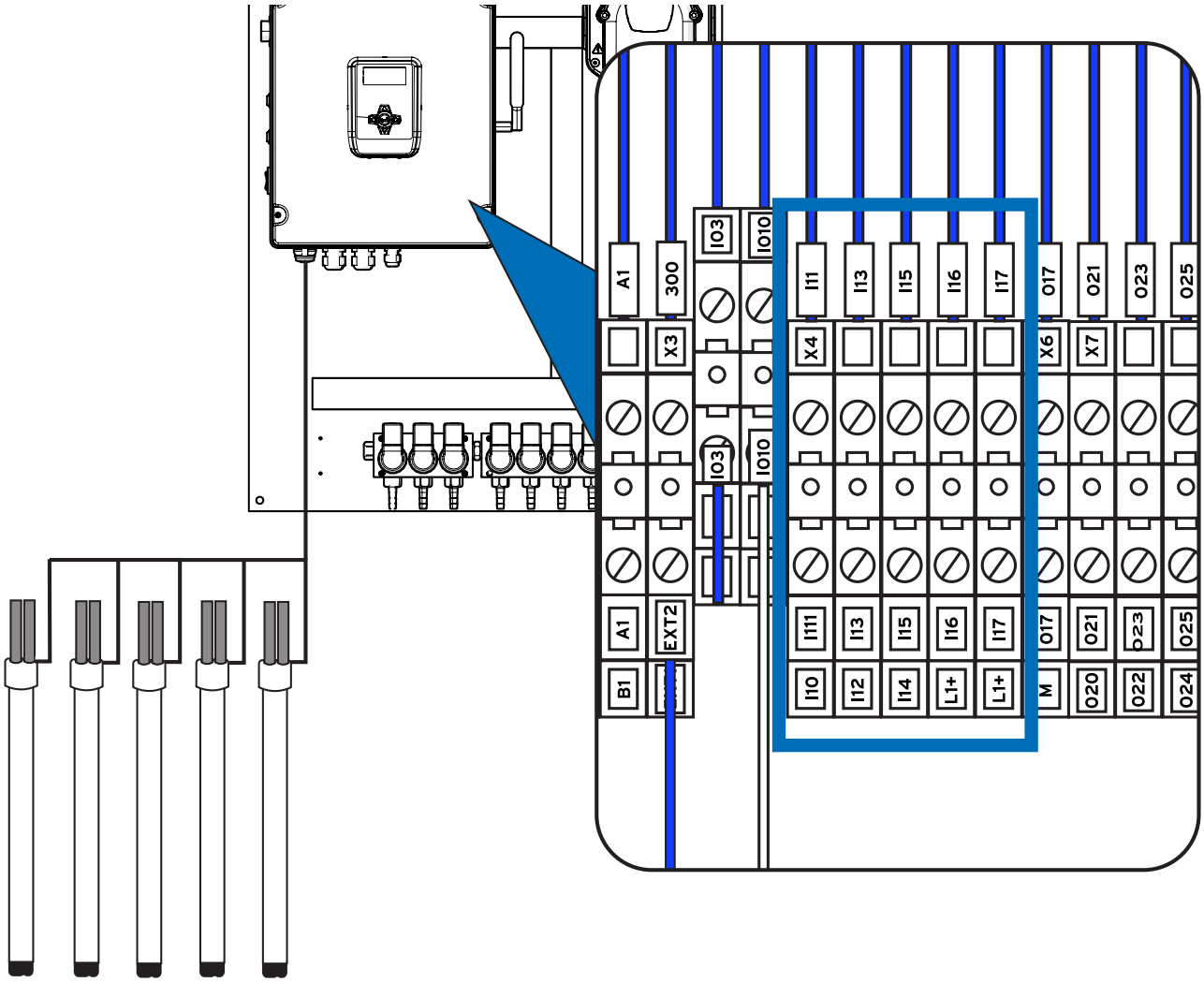

To connect the external suction lances to the machine, utilize inputs **I10** to **I17**, as indicated above.

Connection number	Rod number
I10	SUCTION ROD 1
I11	SUCTION ROD 2
I12	SUCTION ROD 3
I13	SUCTION ROD 4
I14	SUCTION ROD 5
I15	SUCTION ROD 6
I16	SUCTION ROD 7
I17	SUCTION ROD 8
L1+	COMMON 24VDC

CONNECTING YOUR UNIT TO THE INTERNET

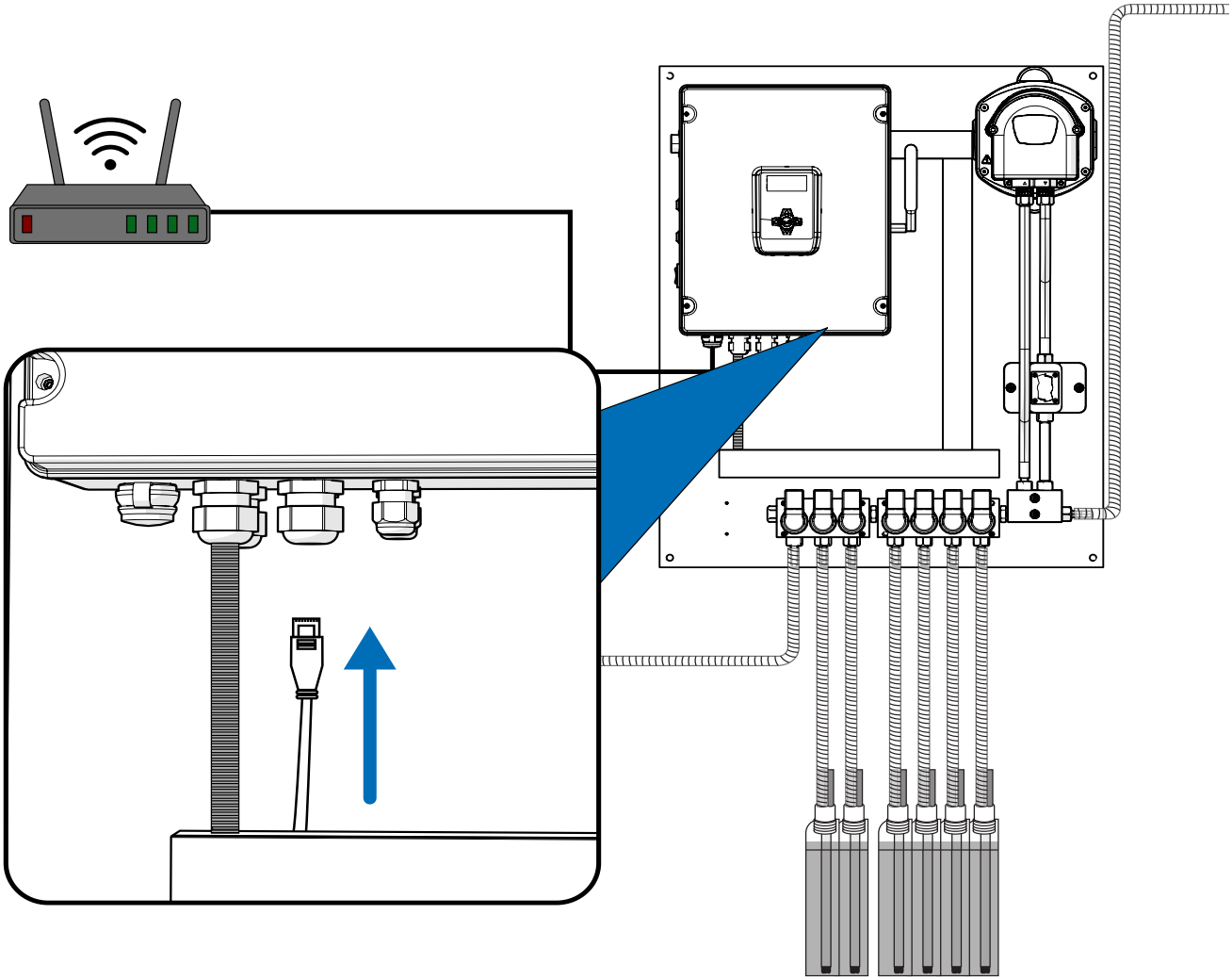

To connect your unit to the internet, simply plug an Ethernet cable into any router through the connector located on the bottom of the main box.

ELECTRICAL CONNECTION TO EXTERNAL ALARM

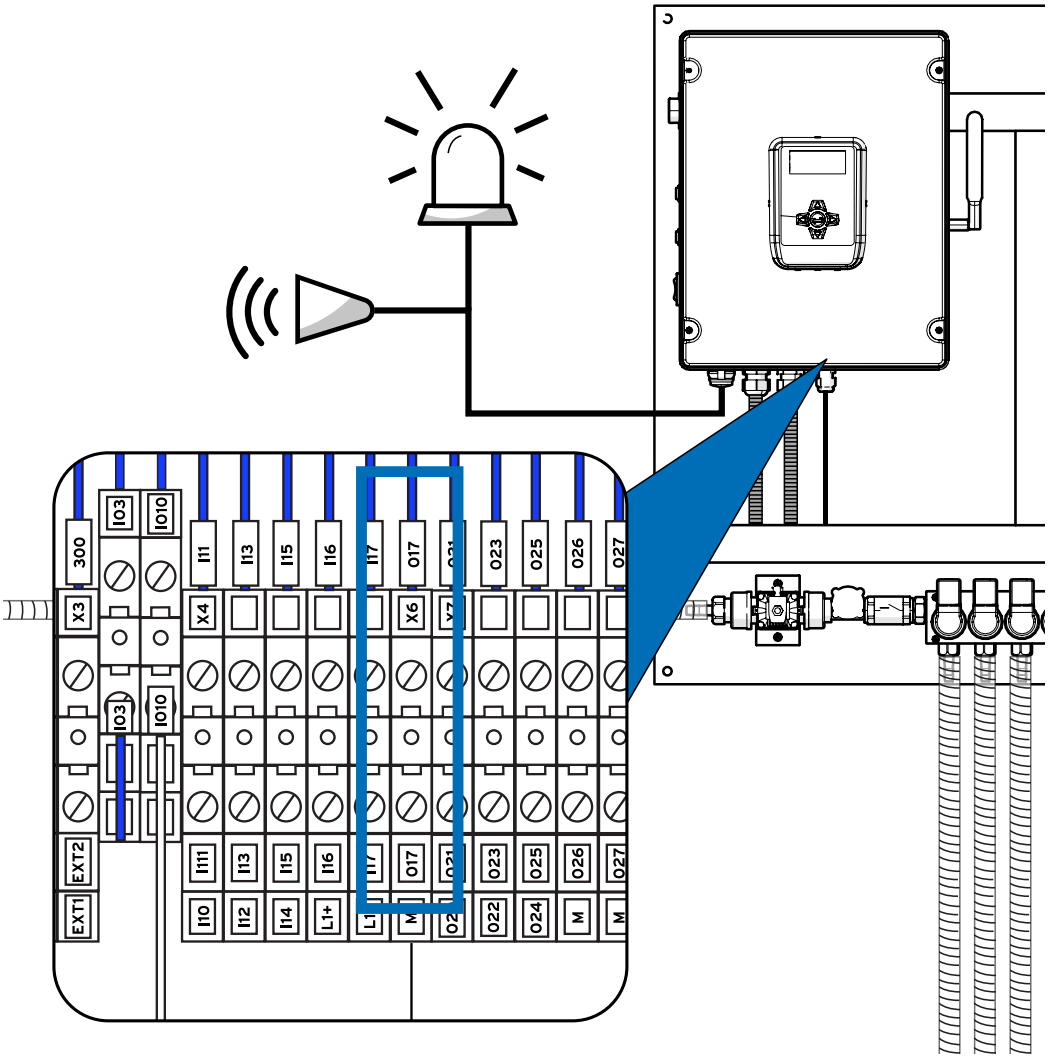

To connect an external alarm or warning light to the system, utilize slot **X6** as depicted above.

Connection number	Rod number
017	24VDC (+)
M	(-)

*The alarm must be 24VDC

ELECTRICAL CONNECTION EMERGENCY STOP

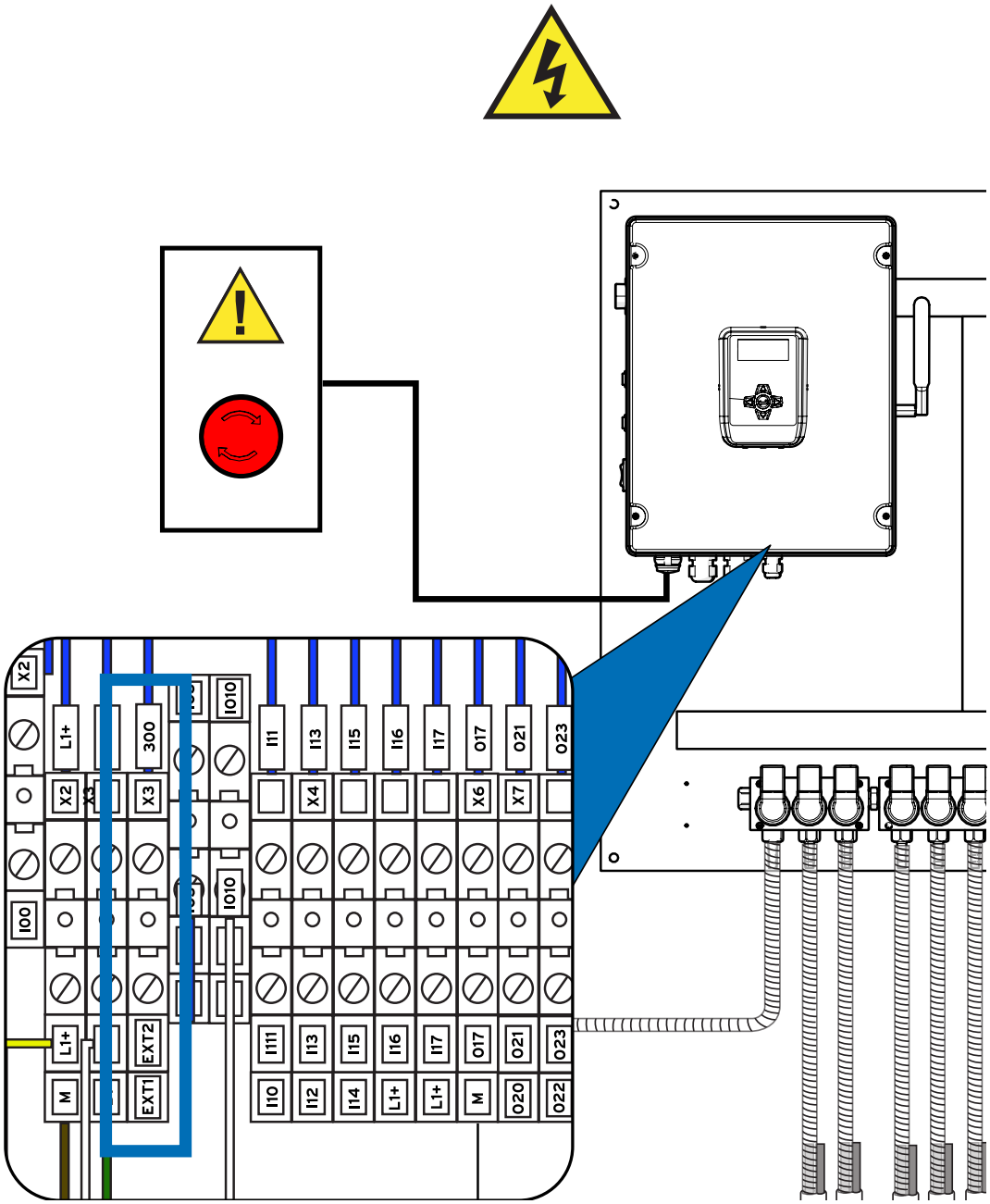

To connect an emergency stop button to your unit, you can use the **EXT1** and **EXT2** connectors slot shown above.

Connection number	Shutdown number
EXT1	EXTERNAL EMERGENCY SHUTDOWN 1
EXT2	EXTERNAL EMERGENCY SHUTDOWN 2

IF NO EMERGENCY STOP IS CONNECTED, LEAVE THE JUMPER EXT1-EXT12 CONNECTED.

MACHINE STATUS AND UNIT INFORMATION

The screen located on your Multiplex 1 Pro unit will allow you to actively see the status of the washers in real time, also displaying any potential issues that may have occurred.

From the main screen you can see the model and version number of the firmware.

From here you can move through the attached machines to see their status.

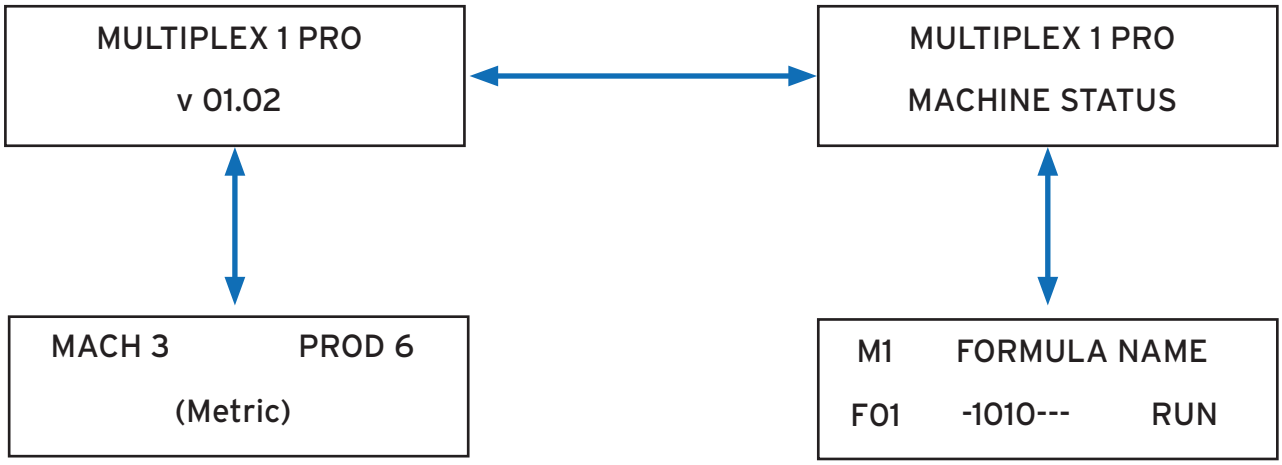

Using the up and down arrow you can display the unit information.
Machine Number
Product Number
Unit of Measurement

This screen displays all current information for the machine and running formula. Use the arrows to navigate between machine. A breakdown of the screen can be seen below.

SCREEN BREAKDOWN

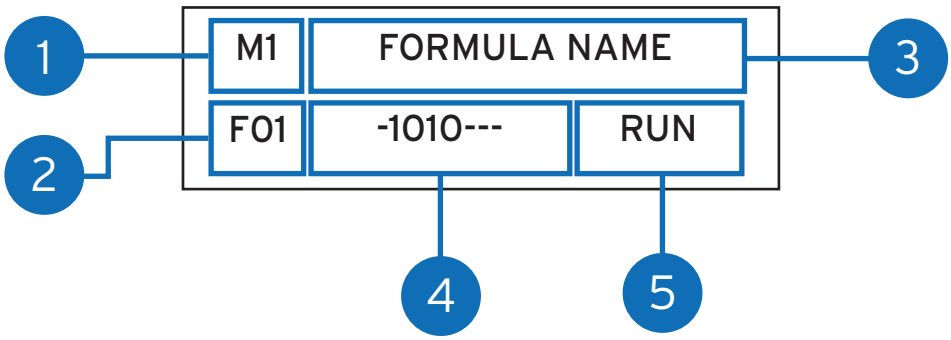

1	Displays the machine number
2	Displays the formula number
3	Displays the name of the formula
4	Displays the programmed phases with the following symbols; **(-)** A dash represents a non programmed phase **(0)** Displays expected phases **(1)** Displays received phases
5	Shows the run status. **RUN** for running. **END** for completed. **HLD** for held.

ALERT INFORMATION

Alert Screen	Description
EMERGENCY ALARM	Indicates a critical emergency that requires immediate attention. Examples include 'AIR PRESSURE FAILED!!' or 'EMERGENCY STOP LOCKED!!'.
LEAK TEST ALARM	Indicates that the unit has failed the leak test and should be inspected.
WATER TEST ALARM	Indicates a problem during the water test, identifying the specific channel (e.g., 'WATER TEST CHANNEL 2').
WATER FLUSH ALARM	Alerts when there is a timeout during the water flush process, with the affected channel noted (e.g., 'FLUSH TIMEOUT CHANNEL 1').
PRODUCT DOSAGE ALARM	Notifies of a timeout in product dosing.
PRODUCT LOW-LEVEL ALARM	Warns that the product level is low, with the specific product name to be displayed.

REPLACING A VALVE ON YOUR MULTIPLEX SYSTEM

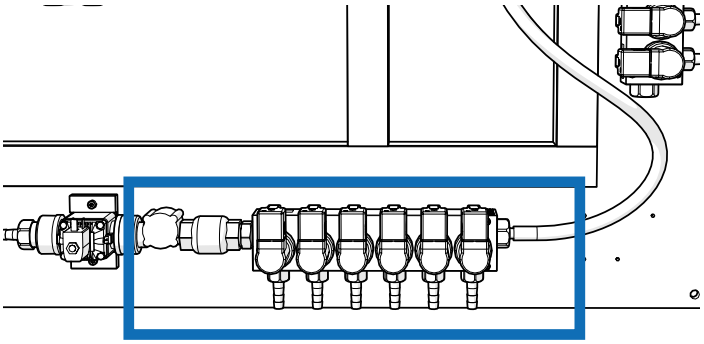

STEP 1

Locate the valve you want to replace located at the bottom of the unit.

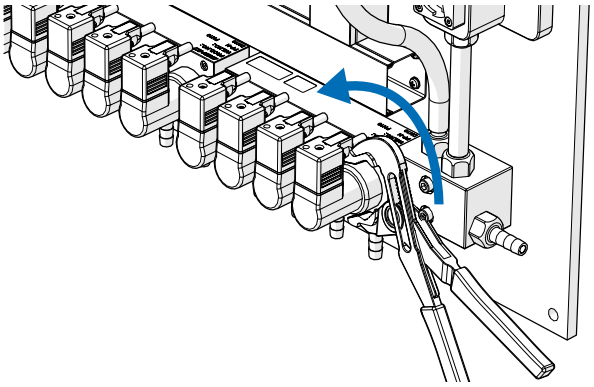

STEP 2

Use adjustable pliers (or similar tool) too loosen the valve.

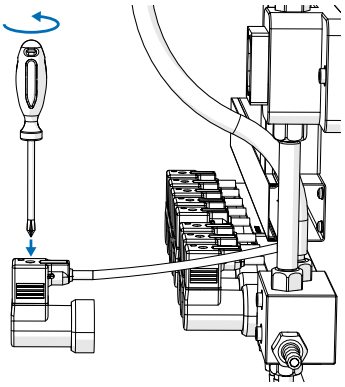

STEP 3

Use a screwdriver to disconnect the connector on the top of the valve.

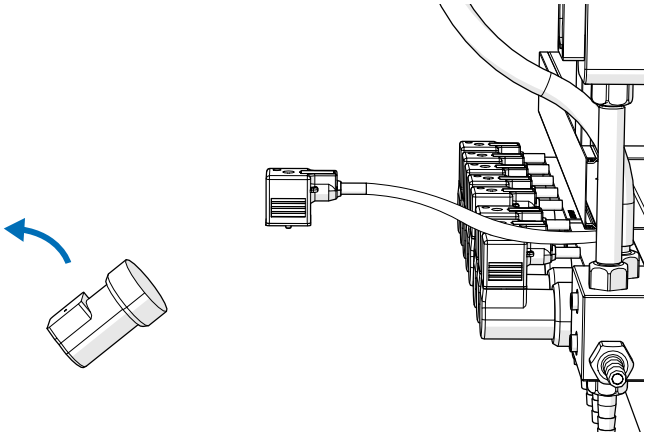

STEP 4

Remove the valve and dispose of safely.

REPLACING A VALVE ON YOUR MULTIPLEX SYSTEM

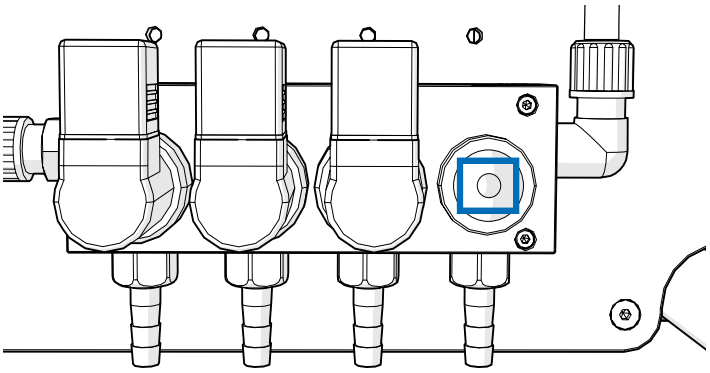

STEP 5

After the valve has been removed you can check for and residue that may have built up from the chemicals. You can remove this easily with a zip tie or something similar.

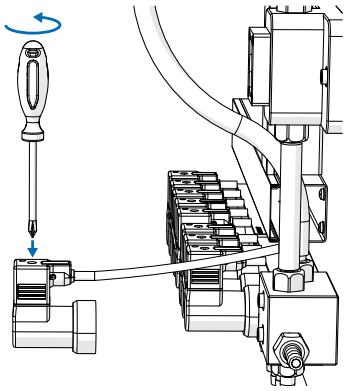

STEP 6

Use a screwdriver to reconnect the connector to the top of the valve.

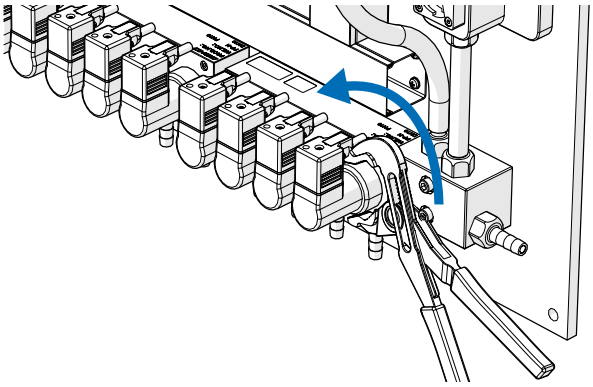

STEP 7

Use the adjustable pliers from before to securely attached the new valve. Confirm this is tightly attached to avoid leakage.

MAINTENANCE

ON EACH MAINTENANCE VISIT

Visual Check: Inspect all connections for leaks or product residues.
Alarms: Access the list of alarms via the webserver. If any particular alarm is noted on one or more days, prioritize addressing it.

EVERY 6 MONTHS

Visual check: look for leaks or product residues at any of the connections.
Alarms: By connecting to the webserver, look at the list of alarms of the equipment. If you notice a particular alarm on one or more days, focus on it.
Calibration: calibrate the products again. Thermal changes affect the viscosity of the product and it is possible that the calibration is not adjusted.

EVERY YEAR

If the equipment operates regularly without seasonal shutdowns, ensure that the suction lines are in good condition. It is recommended to replace the suction line for alkaline products to prevent excessive hardening of the tubes and the risk of breakage.
If the equipment is only used during the summer season, it is important to fill all lines with water at the end of the season, including the suction lines. This helps minimize the effects caused by contact with chemicals and prevents future problems.

FRONT DISPLAY
MAIN SCREEN

To enable access to Calibration, login credentials are required. To do this, you must go to the Calibration section on Web Server.

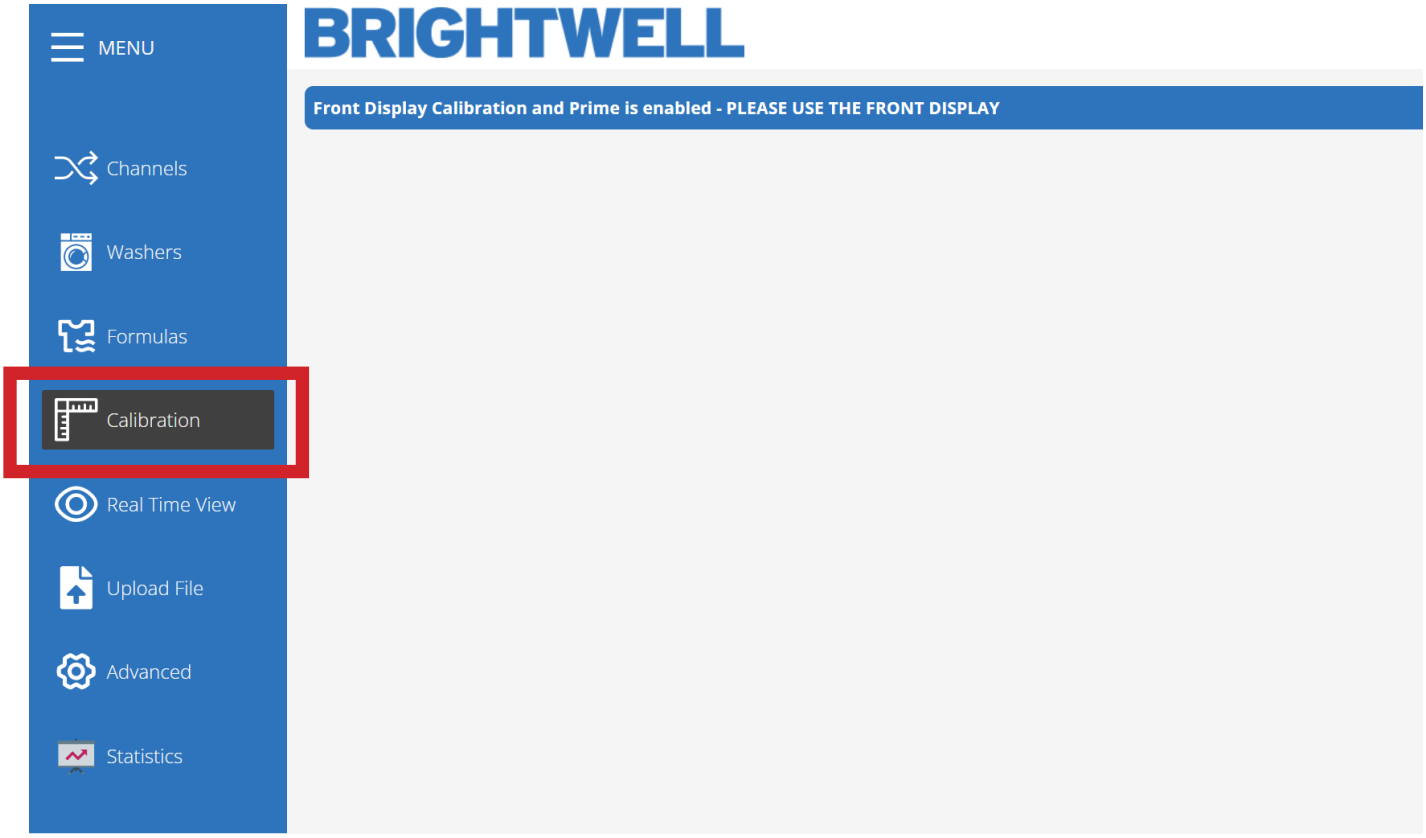

MAIN SCREEN

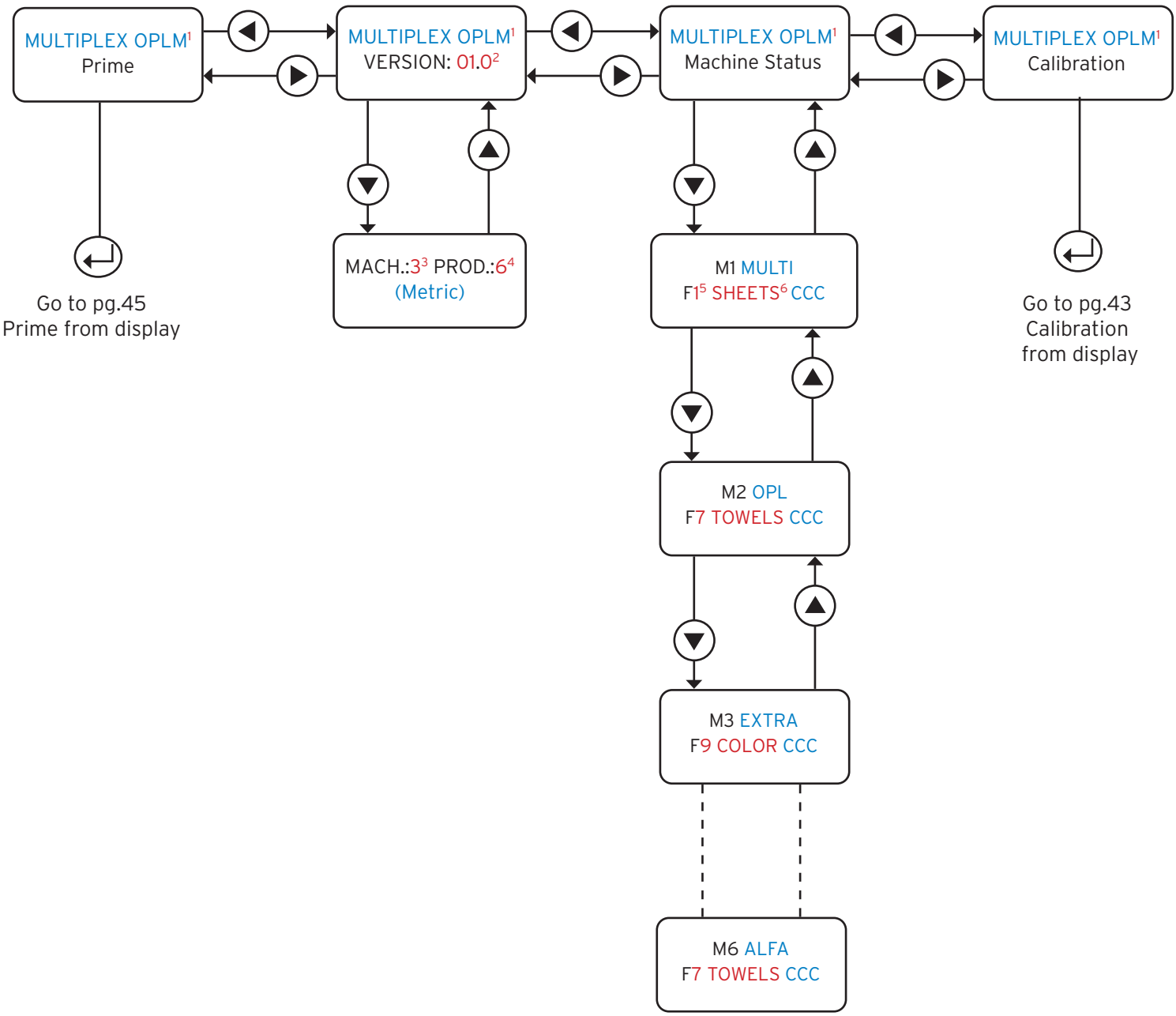

1 Name of unit appears
2 Version of unit appears
3 Number of machines appears
4 Number of products appears
5 Number of formula appears
6 Name of formula appears

SCREEN MAP FOR ALARM POP-UP SCREENS

Emergency alarm

EMERGENCY STOP
LOCKED !!

AIR PRESSURE
FAILED !!

Leak test alarm

LEAK TEST FAILED
CHANNEL 1

Water test alarm

WATER TEST
CHANNEL 1

Water flush alarm

FLUSH TIMEOUT
CHANNEL 1

Product dosage alarm

PRODUCT TIMEOUT
CLORINE[1]

Product low-level alarm

LOW LEVEL
ALKALINE[1]

To stop Emergency alarm, push and hold the central button for 5 seconds. This will stop the dosing process.

To silence other alarms, briefly push the central button.

1 Name of product appears

CALIBRATION FROM DISPLAY

To enter the calibration, you must:

- Logged into Calibration section on Web Server.
- To edit the parameters, you need to press enter and select what you want with the up and down buttons
- Once we start calibrating, you can't go back

WATER

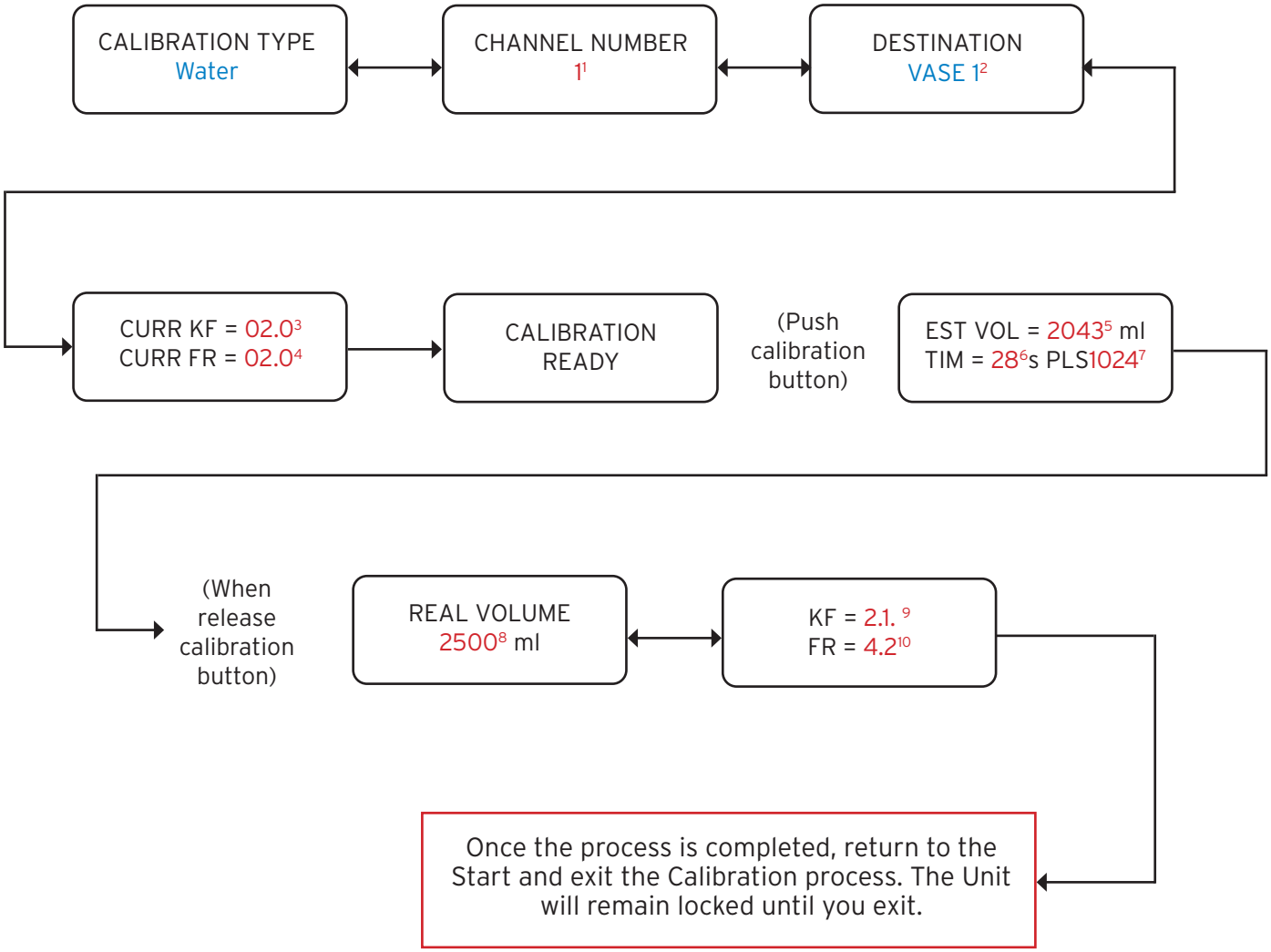

1 Select the number of channel to calibrate
2 Select the name of destination to calibrate
3 Shows the current KF of the channel
4 Shows the current Flow rate of the channel
5 Shows the dosed estimated volume of water
6 Shows the current calibration time
7 Shows the current calibration flow meter pulses
8 Introduce the water real volume of the measured sample
9 Recalculated KF, result of the water calibration
10 Recalculated Flow rate, result of the water calibration

CALIBRATION FROM DISPLAY

PRODUCT

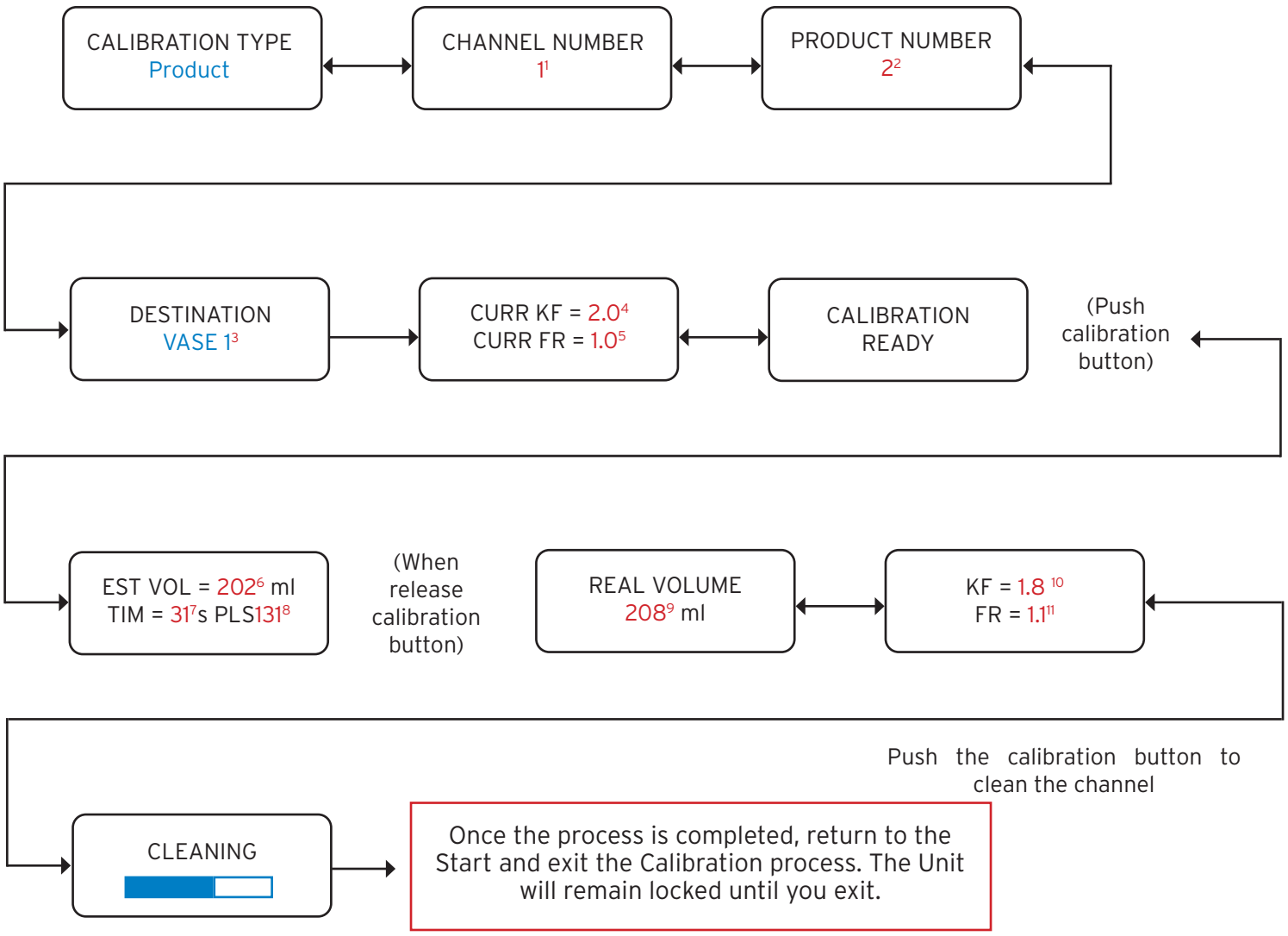

1 Select the number of channel to calibrate
2 Select the number of product to calibrate
3 Select the name of destination to calibrate
4 Shows the current KF of the channel
5 Shows the current Flow rate of the channel
6 Shows the dosed estimated volume of water
7 Shows the current calibration time
8 Shows the current calibration flow meter pulses
9 Introduce the product real volume of the measured sample
10 Recalculated KF, result of the water calibration
11 Recalculated Flow rate, result of the water calibration

PRIME FROM DISPLAY

This feature is unprotected by default. If you wish to protect the Prime process, please check the Advanced Settings section on the Brightwell Web Server User Guide.

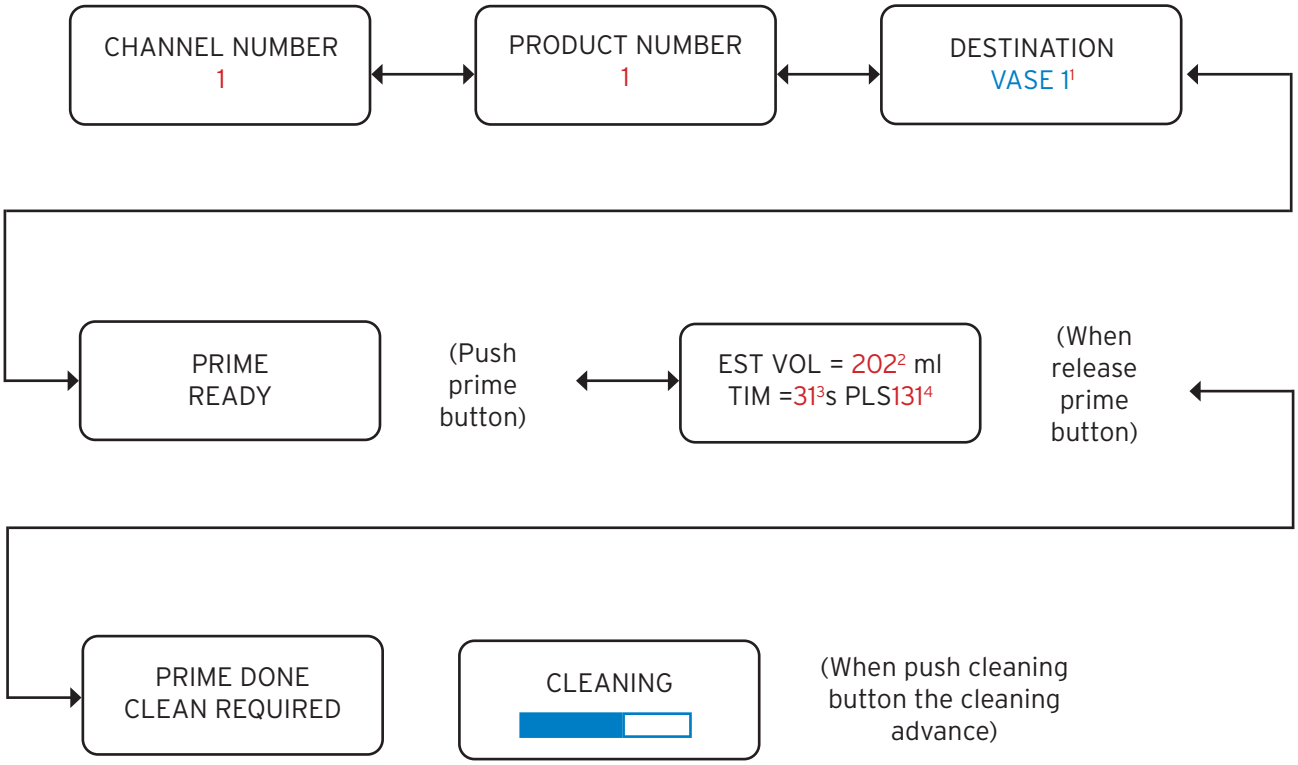

Once the process is completed, return to the Start and exit the Prime process. The Unit will remain locked until you exit.

1 Select the destination name
2 Dosed estimated product volume
3 Time of the product priming
4 Received pulses of the product priming

BRIGHTWELL

T (+1) 913-956-4909 **E** sales@brightwell-inc.com **W** brightwell-inc.com
Brightwell Inc. 9858 Britton Street Lenexa, KS 66219, USA