BRIGHTWELL

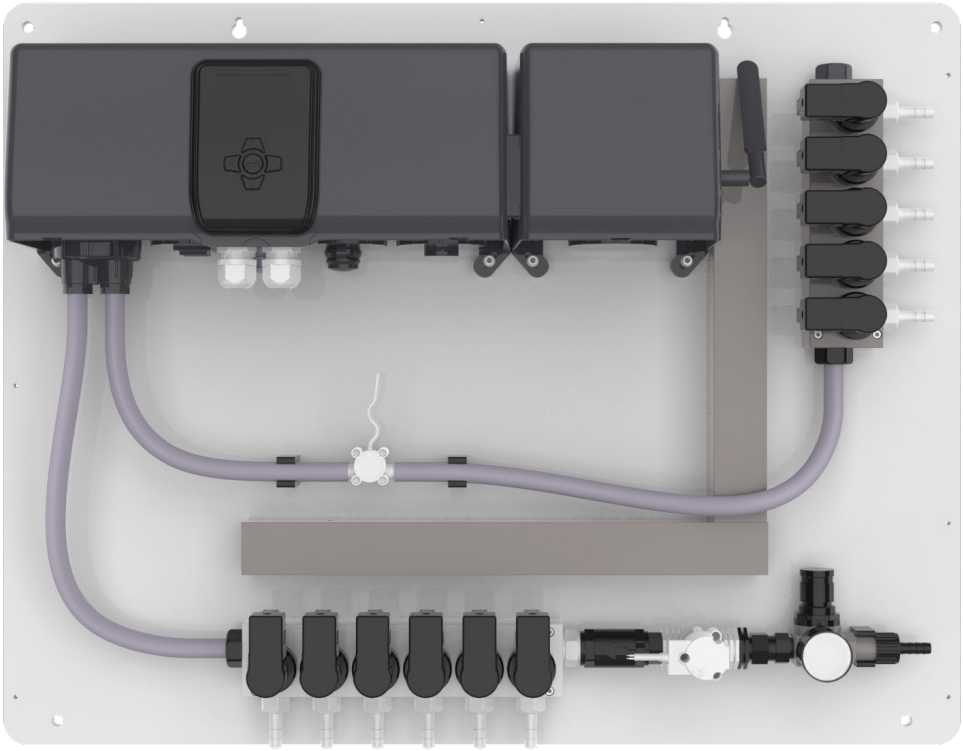

OPL MULTIPLEX M

LAUNDRY DOSING SYSTEM

(ELECTRIC)

INSTALLATION - SETUP - MAINTENANCE

Revision 4.0
10/2026
B1112US

CONTENTS

GENERAL INFORMATION	3
TECHNICAL INFORMATION	5
MAIN UNIT DIAGRAM	6
INSTALLATION AND CONNECTIONS	6
MOUNTING YOUR MULTIPLEX UNIT	8
CONNECTING WATER TO THE OPL UNIT	10
CONNECTING CHEMICAL TO THE OPL UNIT	10
BOOSTER TANK CONNECTION (RECOMMENDED)	11
WIRING DIAGRAM	12
WIRING THE POWER	13
PCB CONNECTIONS FOR YOUR SIGNAL BOX	14
SIGNAL BOX CONNECTOR WIRING GUIDE	15
COMMS WIRING SIGNAL BOX	18
ELECTRICAL WIRING SUCTION LANCES	19
MACHINE STATUS AND UNIT INFORMATION	20
FORMULA SELECTOR	21
ALERT INFORMATION	23
CONNECTING YOUR UNIT TO THE INTERNET	24
MAINTENANCE	25
FRONT DISPLAY	26

GENERAL INFORMATION

SAFETY INFORMATION

Wear protective clothing, gloves and safety glasses when installing our equipment or when handling chemicals. Follow the chemical manufacturer's guidelines for safety advice.

During maintenance work, depower the equipment whenever possible. Be aware of possible chemical residues that may remain on the various components of the equipment. Please flush the equipment with water before carrying out any work.
For information on the products used in this dispensing equipment, refer to the product label and the appropriate Material Safety Data Sheet (MSDS).

Caution! Risk of high voltage electric shock

Electrical installation should only be carried out by trained personnel and in accordance with local electrical wiring regulations. Disconnect power to the unit and isolate it from any electrical source before servicing.

Do not supply power outside the limits indicated on the rating plate.

Please earth the safety equipment as this increases the dispenser's resistance to electrical noise.

Do not use damaged or frayed cables and prevent this from happening by using, when necessary, protective elements (cable glands, conduits, etc...).

The installation of the metering unit must be carried out according to the instructions in this manual.

Do not fix the unit on an unstable, uneven or non-vertical surface. Make sure that the different elements are ! well anchored. Do not place heavy objects on them.

This equipment works in a vertical position, with the control cabinet at the top left and the chemical products underneath the equipment. Do not install it in other positions.

Do not disassemble or modify this equipment, at the risk of losing the possibility of warranty. Replacement of components (pumps, pipes, valves,...) or modification of the system must only be carried out by qualified personnel.

Avoid running the system dry as this may cause damage to the dosing pump(s).

Always ensure that chemicals are handled with care and that the dosing equipment area is adequately ventilated.

Do not reach into the mechanisms.

GENERAL INFORMATION

GUARANTEE

Your product comes as standard with a 2 year warranty from the date of manufacture, against manufacturing fault or defects and mechanical or electrical breakdown. Please visit our website for full terms and conditions.

www.brightwell.co.uk
www.brightwell-inc.com

MÚLTIPLEX

Multiplex is part of the Brightwell proposal for the dosing of chemical products in industrial laundries and is designed to serve any laundry with a **maximum of 5 washing machines (depending on setup).**

For the equipment to operate with 5 washing machines, simply configure it with 5 washing machines and use the measuring cup valve as washing machine number five.

Multiplex is a single-pump unit, with an electric diaphragm pump and is designed for a maximum of 6 products. It is possible to extend its capacities by adding additional panels with pump and suction to be able to dose more products and with simultaneous pumps.

The design of the equipment is based on the parameters that govern the entire Multiplex range:

Technical: Industrial design and conception, with the integration of mechanical, electrical and electronic components conceived for continuous tasks and routines.

Flexible: it can be configured and controlled, "in situ" or remotely, from any device, without the need for special applications or programmes.

Secure: Only company-authorised users have access to the equipment, defined by levels and with possible limitation of functions.

Reliable: Control elements and tools -software and hardware- to enable the precision required for dosing in industrial laundries.

Accurate: Recording of all data to obtain detailed statistics for a correct analysis of consumption, costs, alarms, performance, and production allowing the prognosis and anticipation of possible problems.

Efficient: With routines -software- and elements -hardware- that seek your best performance and effectiveness.

TECHNICAL INFORMATION

UNIT

MULTIPLEX OPL
BUILT IN DISTRIBUTOR
(MAIN UNIT)

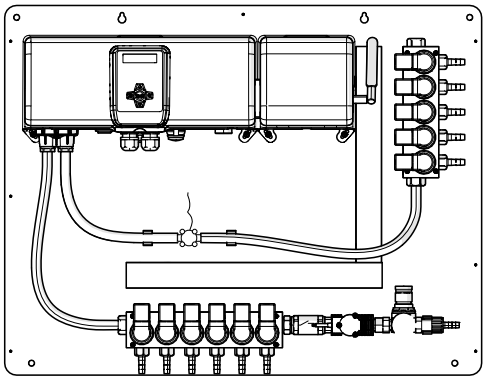

ACCESSORIES

MULTIPLEX
SIGNAL BOX

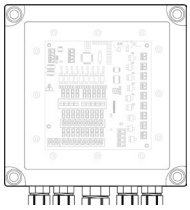

MULTIPLEX
SUCTION ROD

*Brightwell recommends the use of accessories designed to work with Multiplex equipment. Please ask our sales department for more details on these products.

MAIN UNIT DIAGRAM

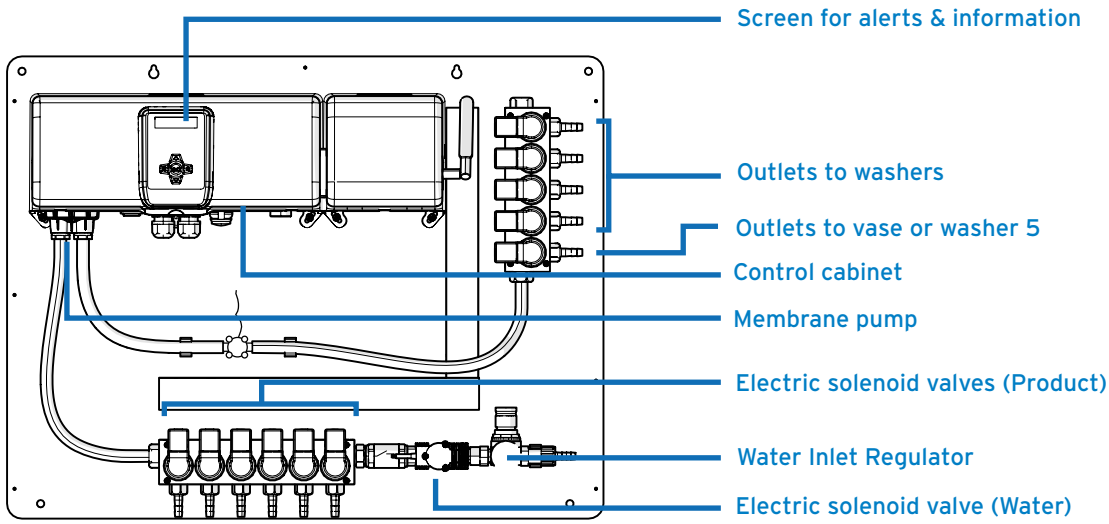

INSTALLATION AND CONNECTIONS

INTRODUCTION

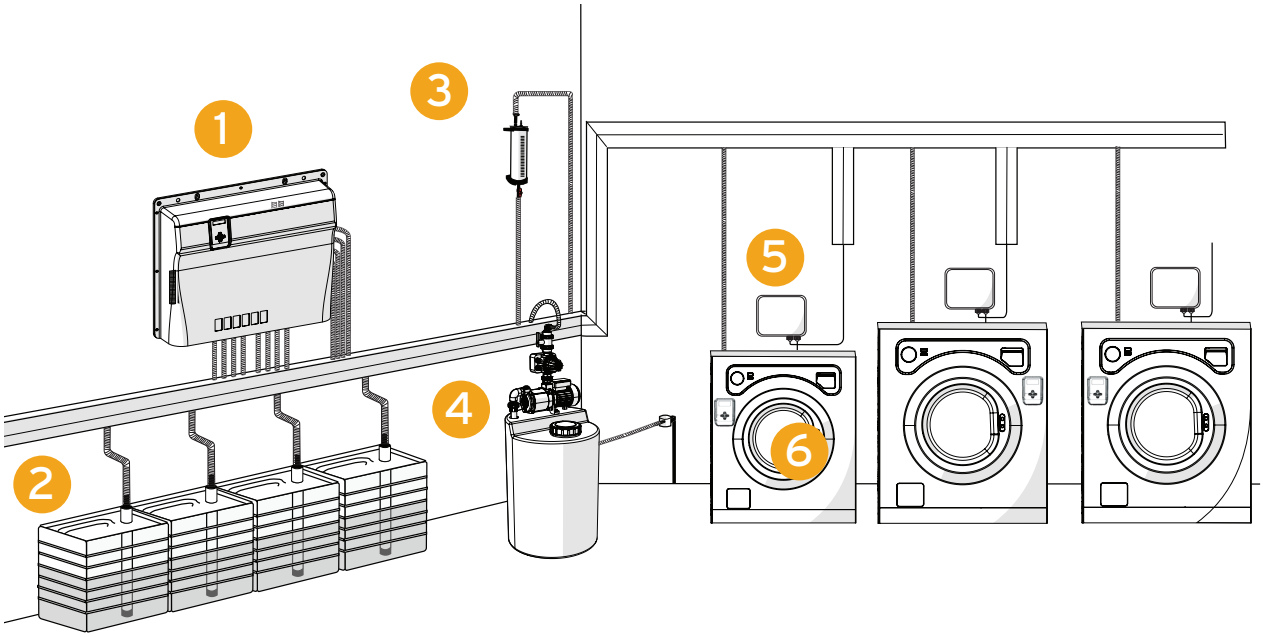

This image reproduces the 'Standard' setup of a Multiplex OPL unit (your setup will vary based on model), it contains

1. The main unit
2. Suction lances for the chemicals
3. A calibration vase for measuring output
4. A booster tank to regulate water pressure
5. Signal boxes for the washing machines
6. Formula Selectors to manage programs

INSTALLATION AND CONNECTIONS

BEFORE INSTALLATION

- Before beginning installation, ensure you have all necessary items and inspect them for any damage.
- Should you find any missing or defective components, refrain from installing them, as doing so could create a hazardous situation and void the warranty. Instead, return the equipment to the dealer in its original packaging. Installation of this system should only be carried out by qualified personnel in accordance with local regulations.
- Identify a smooth, flat surface near the washing machines for installation.
- It's crucial to note that suction points **should not exceed 5 meters**, thus requiring sufficient space near the chosen point and below where the equipment will be mounted.
- Avoid using elements from existing installations for new wiring. We recommend utilising the material kits provided by Brightwell; consult our sales department for assistance. Regardless, all materials used must meet the specifications outlined in this manual.
- Begin by securely fixing the equipment to the wall, ensuring it is positioned vertically and level. Then mount the communication boxes, placing one near each corresponding washing machine.
- Exercise caution when fixing channels for pipe transportation to prevent excessively sharp bends

⚠ Lay out the installation and fix all the elements - equipment, distributor, communication boxes and the necessary installation material - to the wall.

⚠ Install pipes and cables using cable ties to ensure that they are securely fastened to avoid pressure surges.

⚠ Check the product piping to avoid any possible chokes that could cause an inconvenient flow of the product.

⚠ Connect all electrical cables - using ferrules, if possible - and all pipes - using metal clamps.

⚠ Install electricity and water supplies (and air, if required).

⚠ Communication: Check all communication box connections, configure each box and selector to identify which washer they correspond to. Disconnect the communication connectors leaving only the first box connected.

⚠ Check, before raising the circuit breaker, with a multimeter that the incoming voltage is 110-240 VAC / 50-60Hz.

⚠ Supply power to the equipment and open the water supply (and air supply, if required).

⚠ Check that the supplies are adequate in terms of pressure and flow.

MOUNTING YOUR MULTIPLEX UNIT

1.

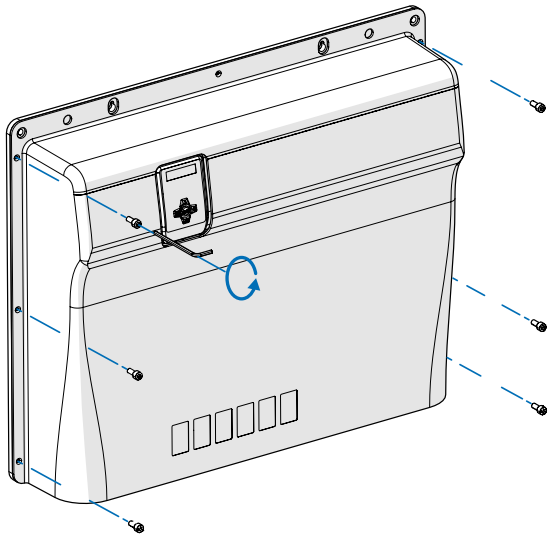

Remove the M6 screws attaching the cover to the OPL unit.

2.

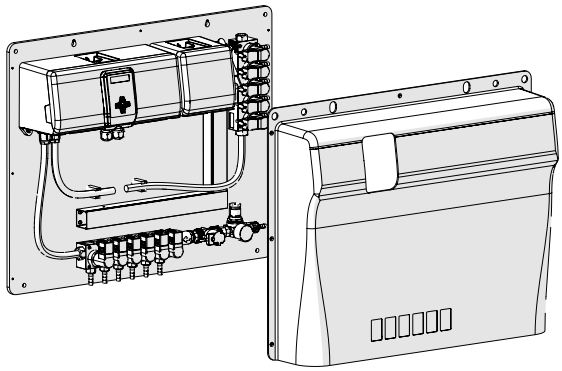

Once all screws are removed, remove the front cover and store safely.

3.

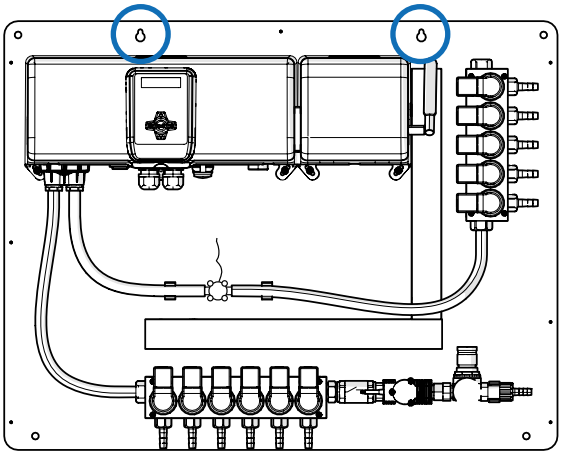

Once all screws are removed, remove the front cover and store safely.

4.

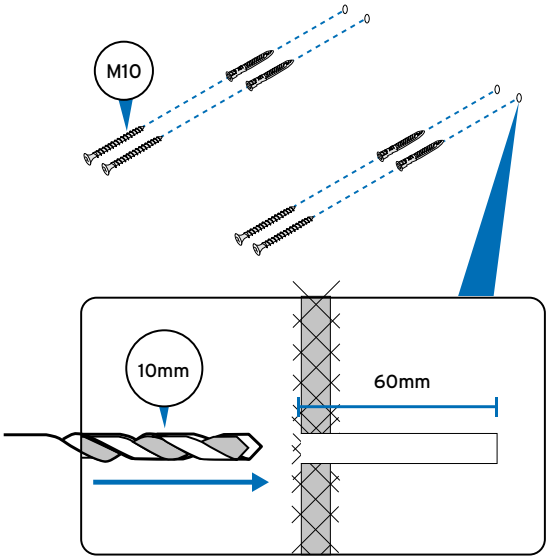

Drill holes into the wall and insert the rawl plugs included. (3/8"/ 2.4 in.)

MOUNTING YOUR MULTIPLEX UNIT

5.

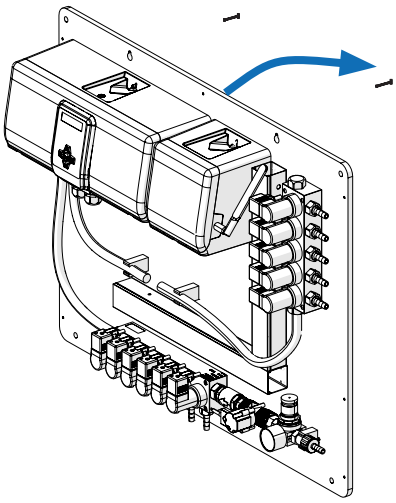

Hook the unit to the wall using the screws before.

6.

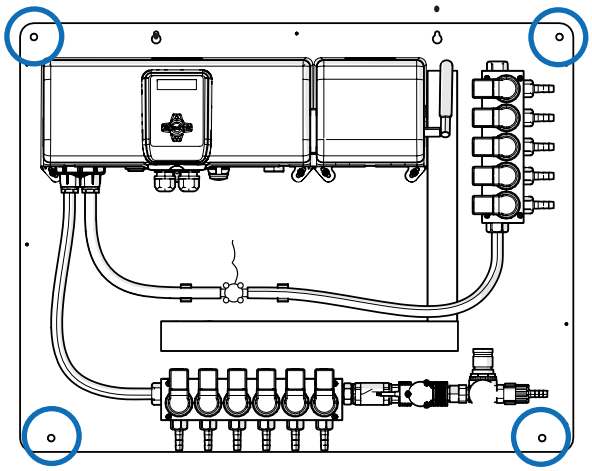

Mark the additional holes.

7.

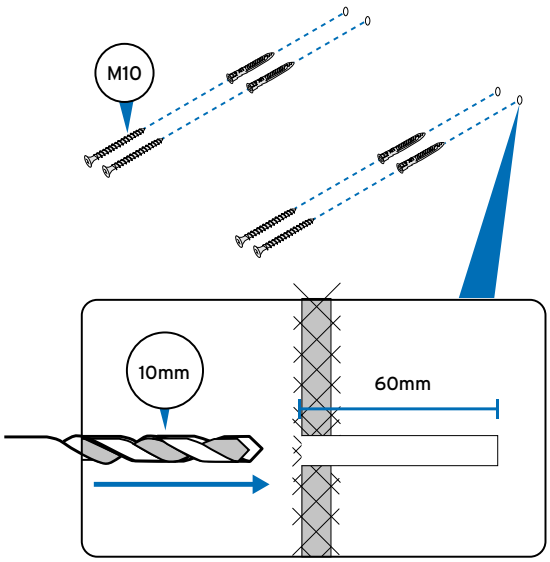

Remove the unit from the wall and insert the additional rawl plugs. (3/8"/ 2.4 in.)

CONNECTING WATER TO THE OPL UNIT

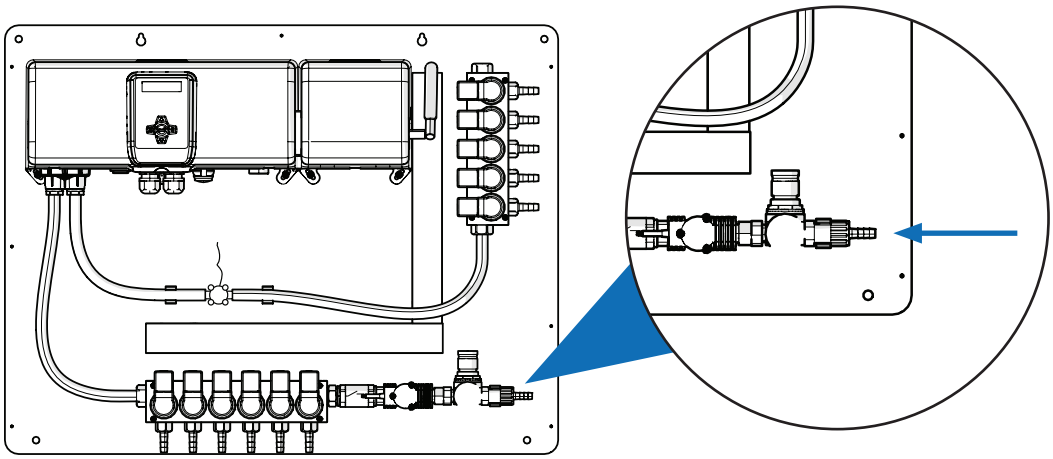

Attach the water to the inlet regulator seen here. It is recommended that you purchase a booster tank to maintain a **constant pressure rate of 1.8 bars(26 PSI)**. Use **10x16 braided (3/8" in) PVC pipe** and stainless steel clamp.

CONNECTING CHEMICAL TO THE OPL UNIT

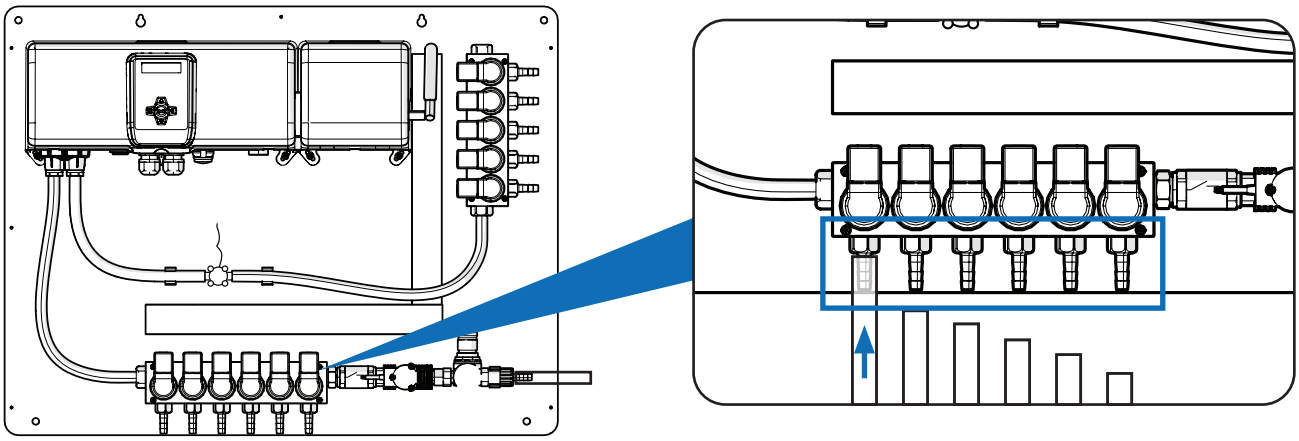

Attach the chemicals inlets to the connectors seen here using **10x16 braided (3/8" in) PVC pipe.**

BOOSTER TANK CONNECTION (RECOMMENDED)

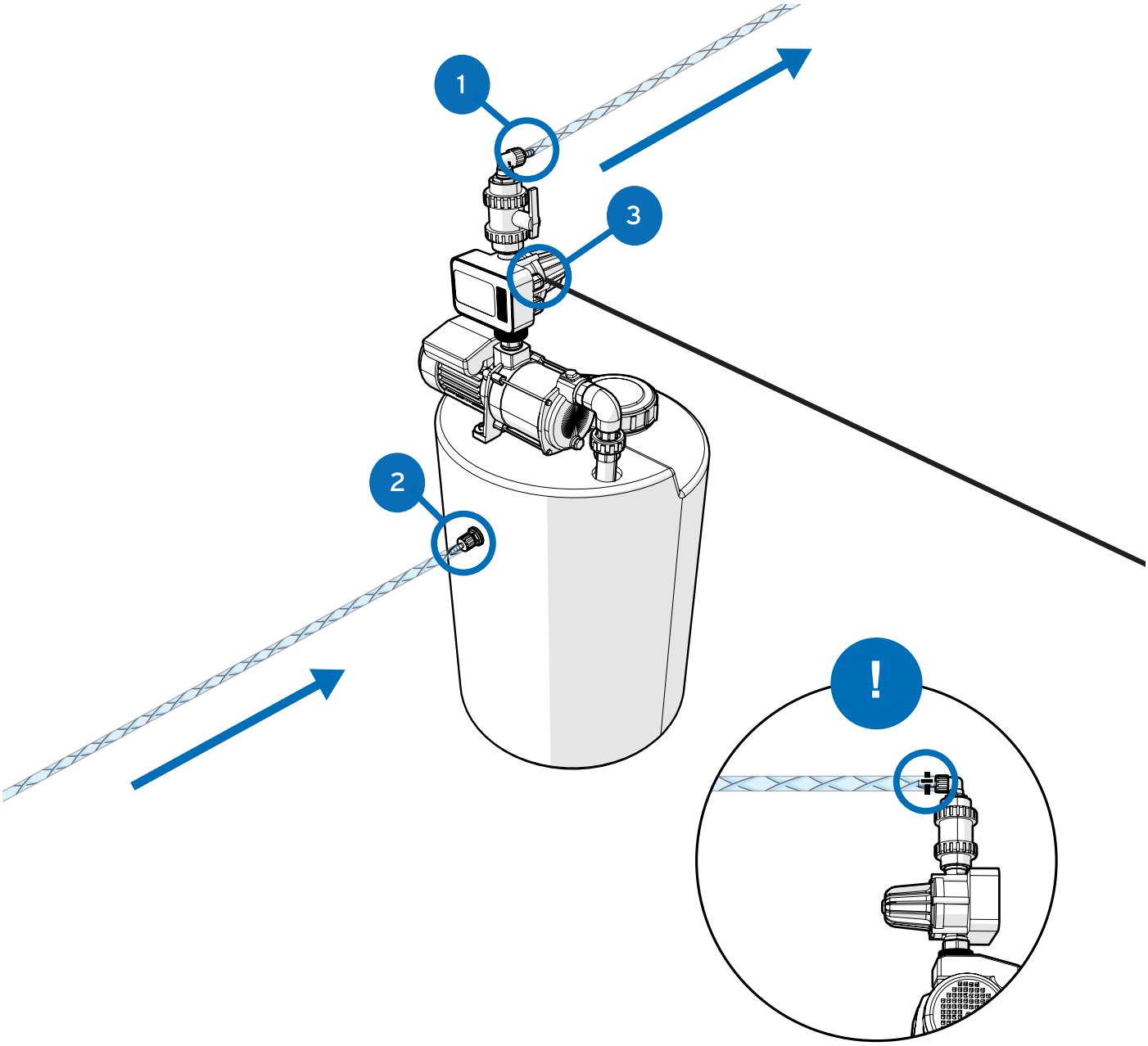

Please note that the unit requires a flow rate of minimum **2 L/min (0.53 GPM)** to maximum **10 L/min (2.64 GPM),** and a dynamic pressure range of **1.5 bar (21.8 psi) minimum to 3 bar (43.5 psi) maximum**. A booster tank is recommended whenever a consistent supply is not available.

Use zip ties or hose clamps on all water connections to avoid leads.

Please note - If you do not use a booster tank performance values can not be guaranteed by Brightwell.

No.	Description
1	Water Outlet 10mm (3 bar regulated) (3/8" in barbed connector)
2	Water Inlet 10mm (3/8" in barbed connector)
3	110 - 240 v Pump Input

WIRING DIAGRAM

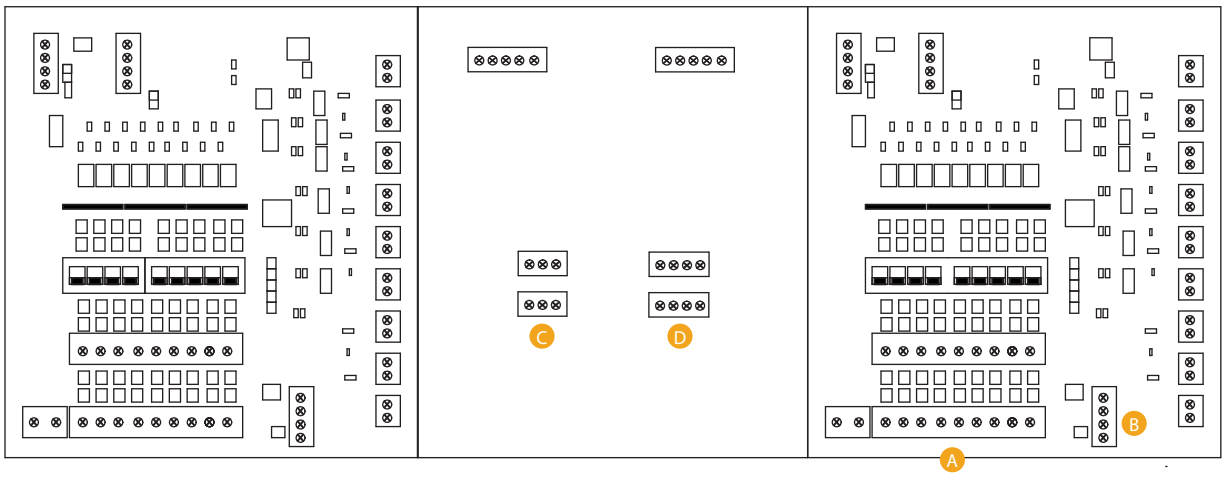

A

SUCTION LANCE 1

SUCTION LANCE 2

SUCTION LANCE 3

SUCTION LANCE 4

SUCTION LANCE 5

SUCTION LANCE 6

SUCTION LANCE 7

SUCTION LANCE 8

B

SUCTION LANCE COMMON (TOP PIN ONLY)

C

LIVE

NEUTRAL

EARTH/GROUND

D

POSITIVE

NEGATIVE

A

B

WIRING THE POWER

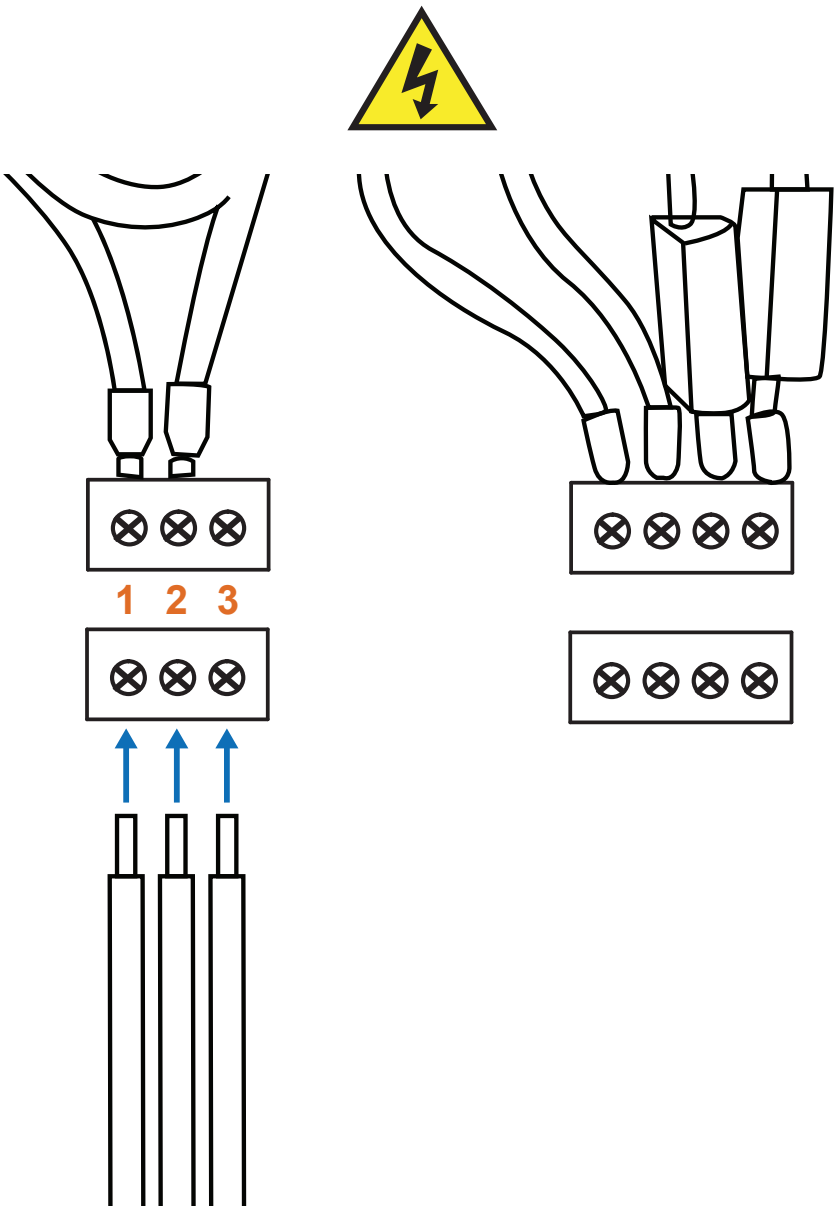

For the power supply of the equipment you must use **3x1'5mm2 cable (3-conductor 16 AWG cable).** Insert the cable through the channel located at the bottom left and use one of the cable glands to insert it safely inside the control cabinet. Connect to the terminals identified with **X1** found on the lower left of the connections.
The power supply must be suitably protected. Use a specific line for the power supply of the equipment.

Connector	Description
1	LIVE
2	NEUTRAL
3	EARTH/GROUND

PCB CONNECTIONS FOR YOUR SIGNAL BOX

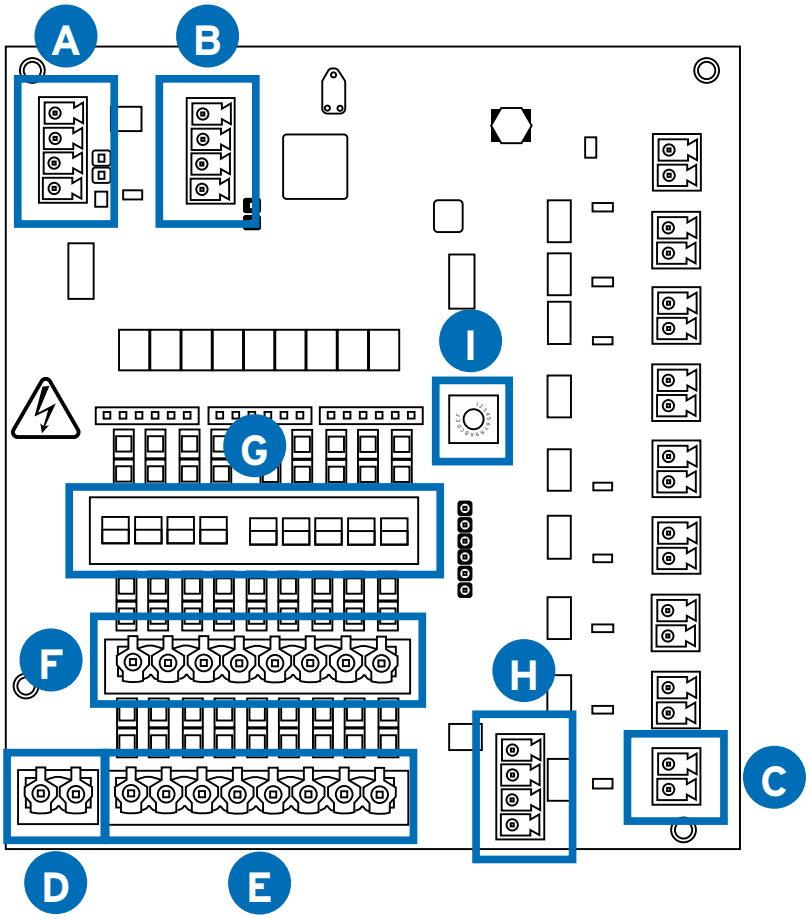

Connector	Description
A	COMMS IN
B	COMMS OUT
C	MACHINE PAUSE
D	COMMON NEUTRAL*
E	SIGNAL/TRIGGER INPUTS*
F	ISOLATED NEUTRAL *
G	COMMON OR ISOLATED DIP SWITCH SELECTOR
H	FORMULA SELECT CONNECTOR
I	MACHINE NUMBER ROTARY SELECTOR *Please turn the rotary dial to the machine number in the setup. IE Number 1 = Machine 1 Number 2 = Machine 2

* For the connection between the signal box and laundry machine, you'll need to provide a cable with the correct number of conductors for both signal and neutral transmission.

SIGNAL BOX CONNECTOR WIRING GUIDE

A

COMMS IN

(From the main dosing unit to the signal box)

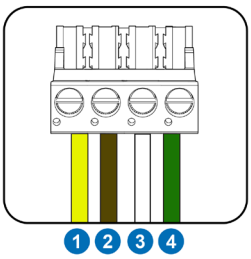

No.	Description
1	24 V +
2	24 V -
3	COMMS A
4	COMMS B

B

COMMS OUT

(To the next signal box in the chain)

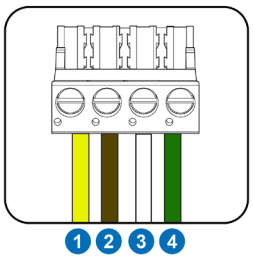

No.	Description
1	24 V +
2	24 V -
3	COMMS A
4	COMMS B

C

VALVE OUTPUTS

(24 VDC)

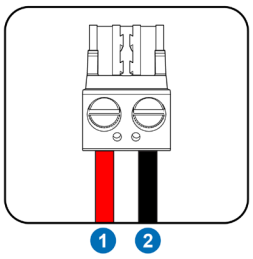

No.	Description
1	24 V +
2	24 V -

D

COMMON NEUTRAL *

(Common neutral input)

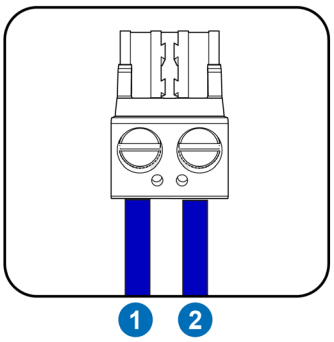

No.	Description
1	COMMON NEUTRAL
2	COMMON NEUTRAL

E

SIGNAL/TRIGGER INPUTS *

(Signal inputs from machine)
(24 - 240 VDC)

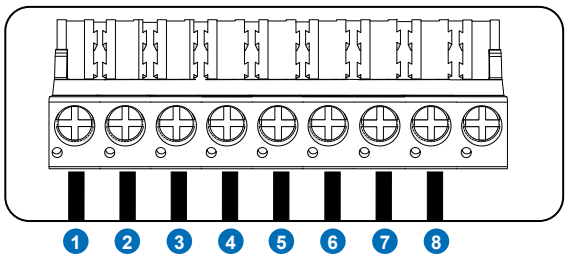

No.	Description
1	SIGNAL/TRIGGER INPUT 1
2	SIGNAL/TRIGGER INPUT 2
3	SIGNAL/TRIGGER INPUT 3
4	SIGNAL/TRIGGER INPUT 4
5	SIGNAL/TRIGGER INPUT 5
6	SIGNAL/TRIGGER INPUT 6
7	SIGNAL/TRIGGER INPUT 7
8	SIGNAL/TRIGGER INPUT 8

SIGNAL BOX CONNECTOR WIRING GUIDE

F

ISOLATED NEUTRAL INPUTS

(Neutral inputs for isolated signals)
24 - 240 VDC)

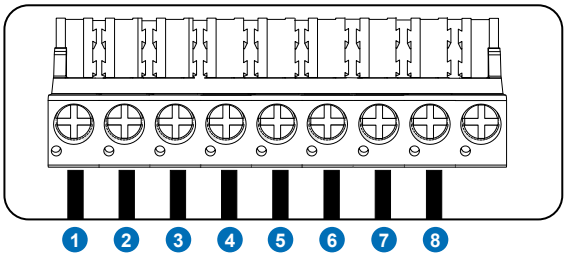

No.	Description
1	ISOLATED NEUTRAL SIGNAL INPUT 1
2	ISOLATED NEUTRAL SIGNAL INPUT 2
3	ISOLATED NEUTRAL SIGNAL INPUT 3
4	ISOLATED NEUTRAL SIGNAL INPUT 4
5	ISOLATED NEUTRAL SIGNAL INPUT 5
6	ISOLATED NEUTRAL SIGNAL INPUT 6
7	ISOLATED NEUTRAL SIGNAL INPUT 7
8	ISOLATED NEUTRAL SIGNAL INPUT 8

H

FORMULA SELECTION INPUT

(Formula Select Input)

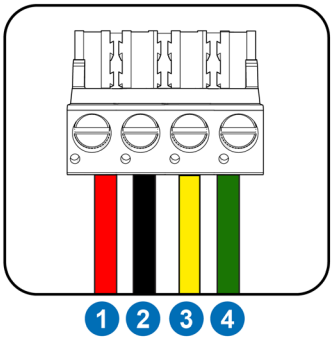

No.	Description
1	24 V +
2	24 V -
3	COMMS A
4	COMMS B

SIGNAL BOX CONNECTOR WIRING GUIDE

DIP SWITCH CONFIGURATION AND SETUP

To configure the neutral connections, utilise the dip switches positioned above the signal inputs. Set the dip switch to either the **COMMON** or **ISOLATED** position as required. For isolating a trigger signal, move the dip switch to the **TOP** position. Conversely, if it shares a common neutral, move it to the **BOTTOM** position. Here's an example:

Trigger 1: Isolated - Dip switch 1 set to **TOP**
Trigger 2: Common - Dip switch 2 set to **BOTTOM**

DIAGRAM

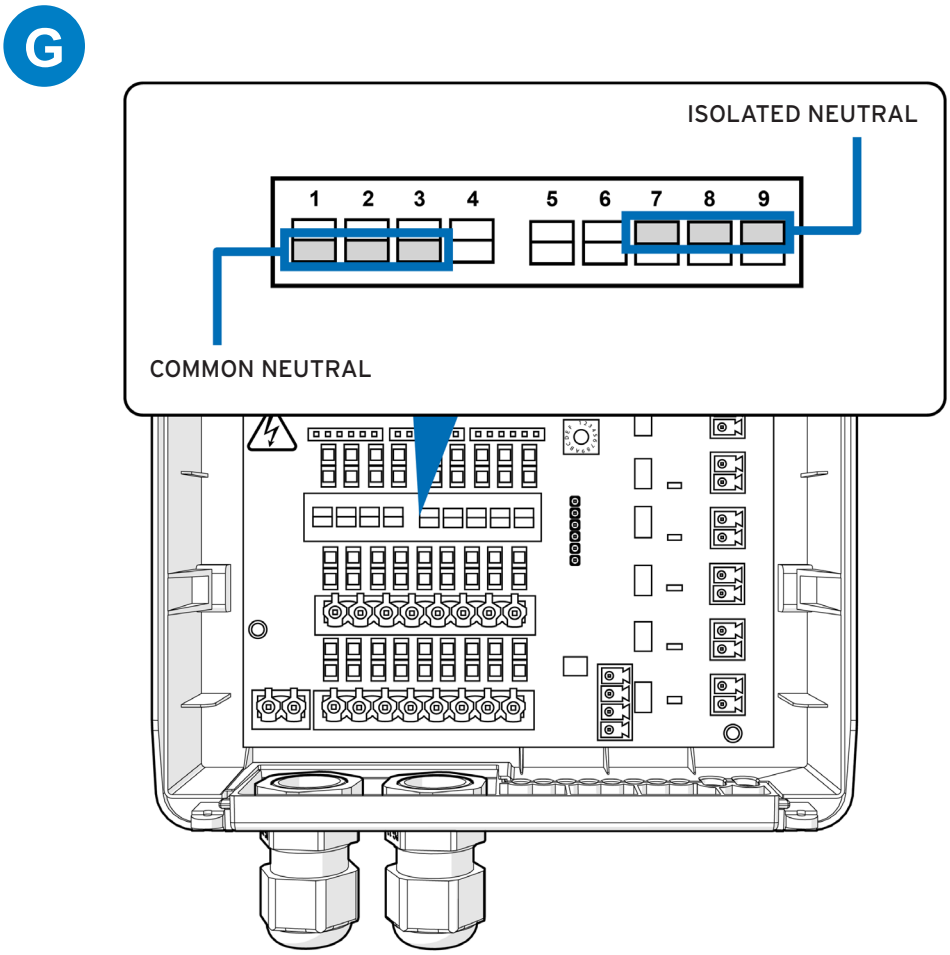

COMMS WIRING SIGNAL BOX

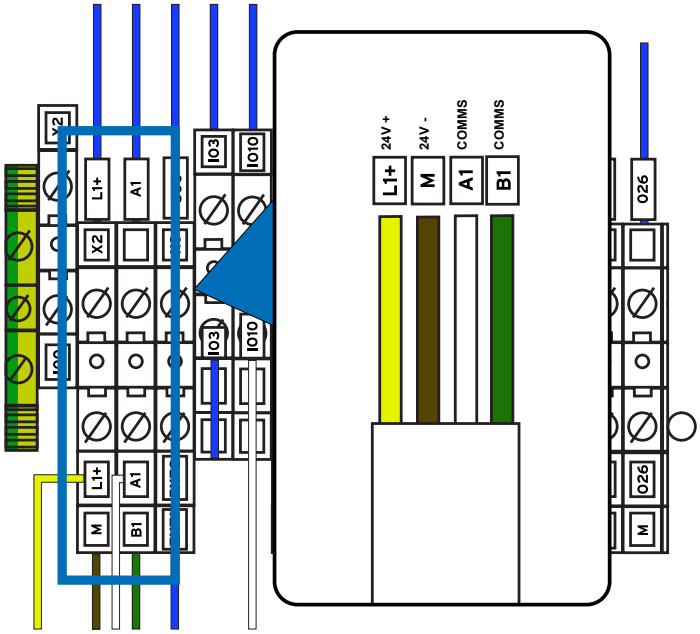

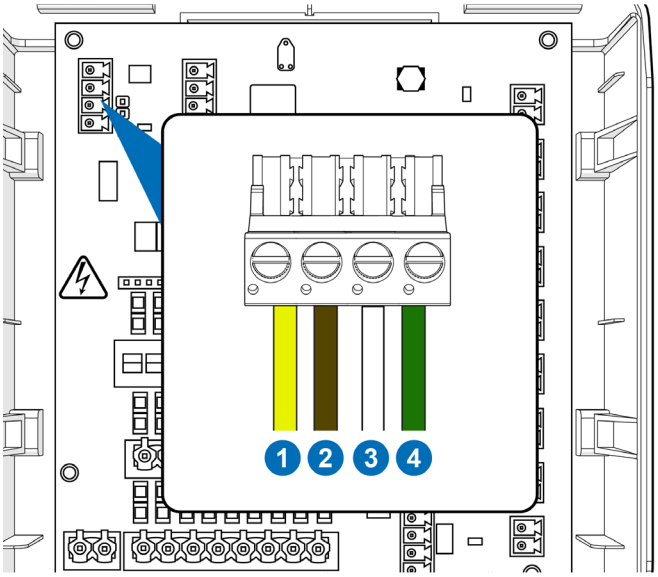

To connect the external communication box to the unit, connect terminal X2 on the main machine to terminal X1 on the communication box.

No.	Description
L1+	24 V +
M	24 V -
A1	COMMS A
B1	COMMS B

No.	Description
1	24 V +
2	24 V -
3	COMMS A
4	COMMS B

ELECTRICAL WIRING SUCTION LANCES

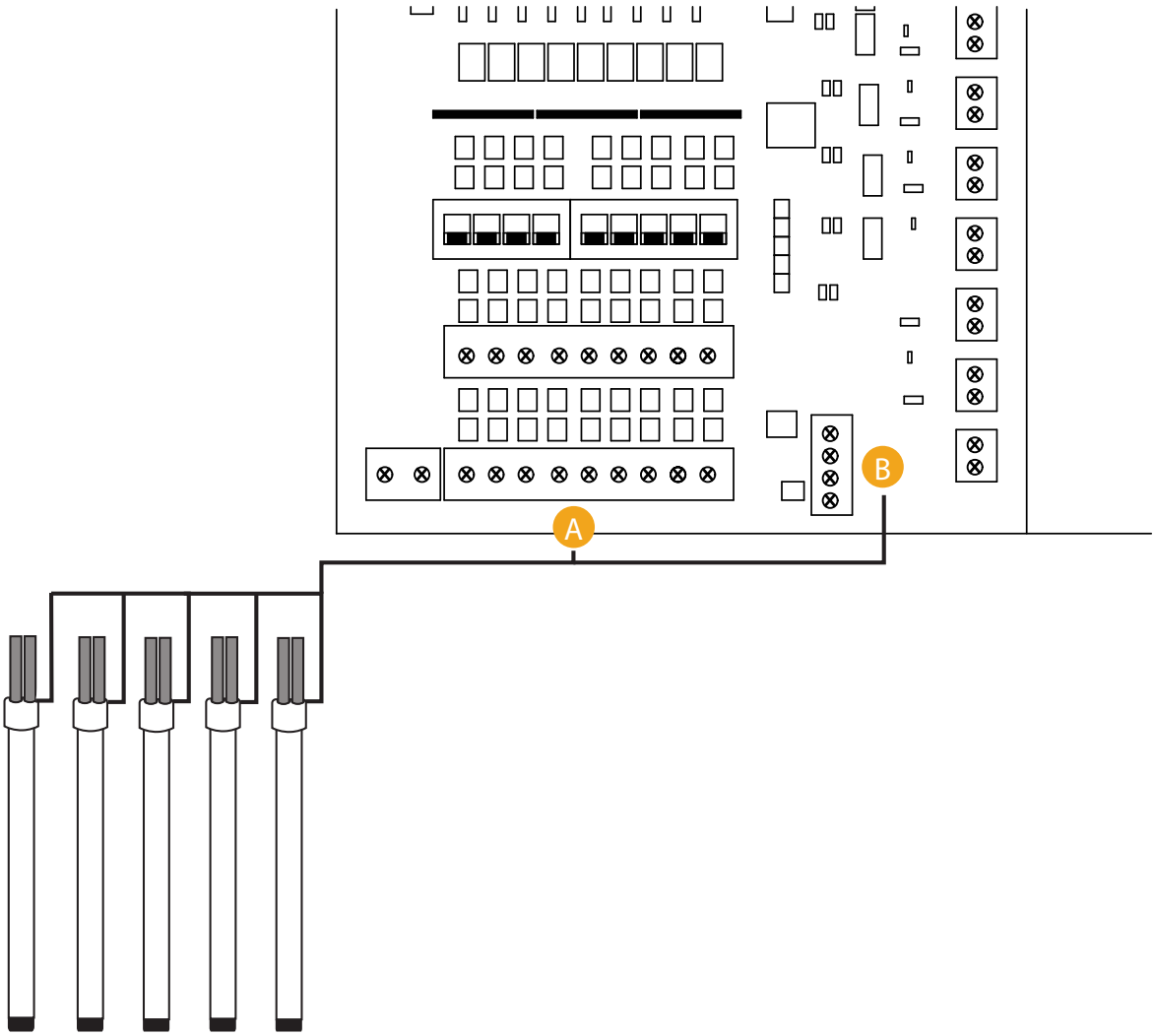

To connect the external suction lances to the machine, utilize inputs as indicated above.

Connection	Rod number
A	SUCTION ROD 1 - 9
B	NEUTRAL (TOP PIN)

MACHINE STATUS AND UNIT INFORMATION

The screen located on your Multiplex OPL unit will allow you to actively see the status of the washers in real time, also displaying any potential issues that may have occurred.

From the main screen you can see the model and version number of the firmware.

From here you can move through the attached machines to see their status.

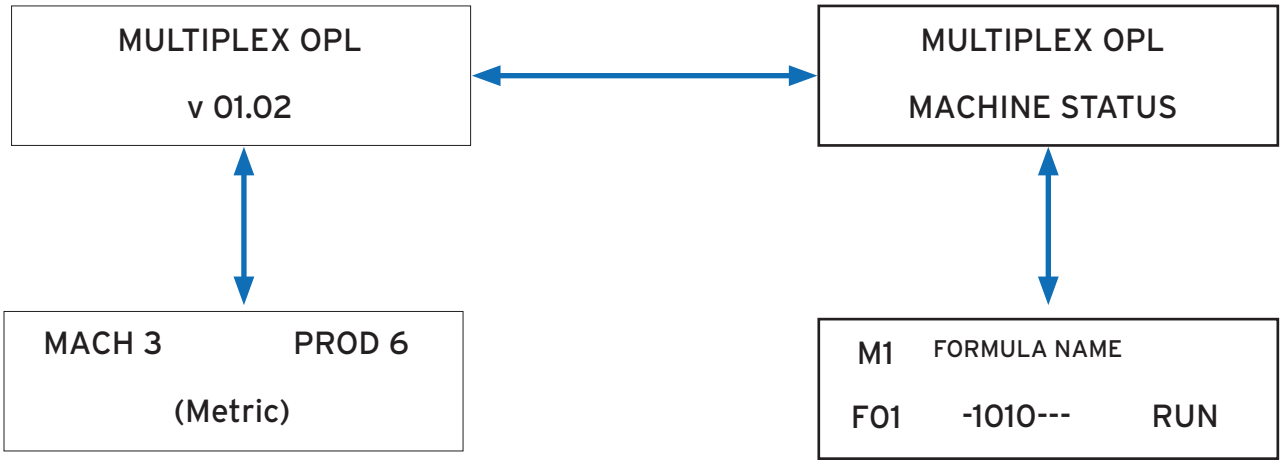

Using the up and down arrow you can display the unit information.
Machine Number
Product Number
Unit of Measurement

This screen displays all current information for the machine and running formula. Use the arrows to navigate between machine. A breakdown of the screen can be seen below. Use the up and down arrow to move between machines

SCREEN BREAKDOWN

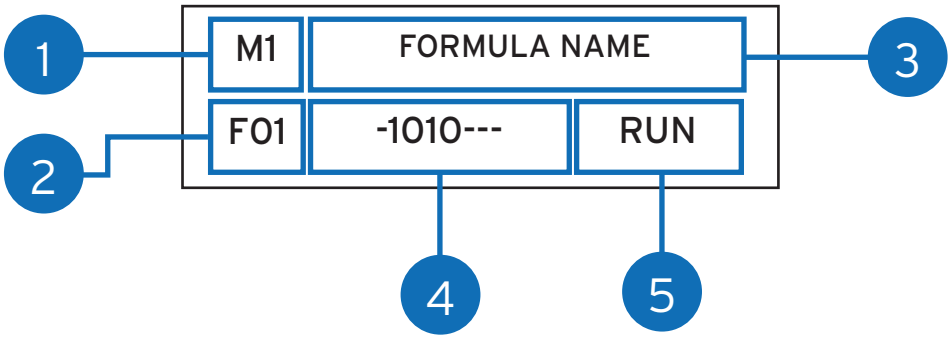

1	Displays the machine number
2	Displays the machine number
3	Displays the name of the formula
4	Displays the programmed phases with the following symbols (-) A dash represents a non programmed phase (0) Displays expected phases **(1)** Displays received phases
5	Shows the run status. **RUN** for running. **END** for completed. **HLD** for held.

FORMULA SELECTOR

The screen located on your Formula Selector Module will allow you to actively see the status of the washers and wash programs.

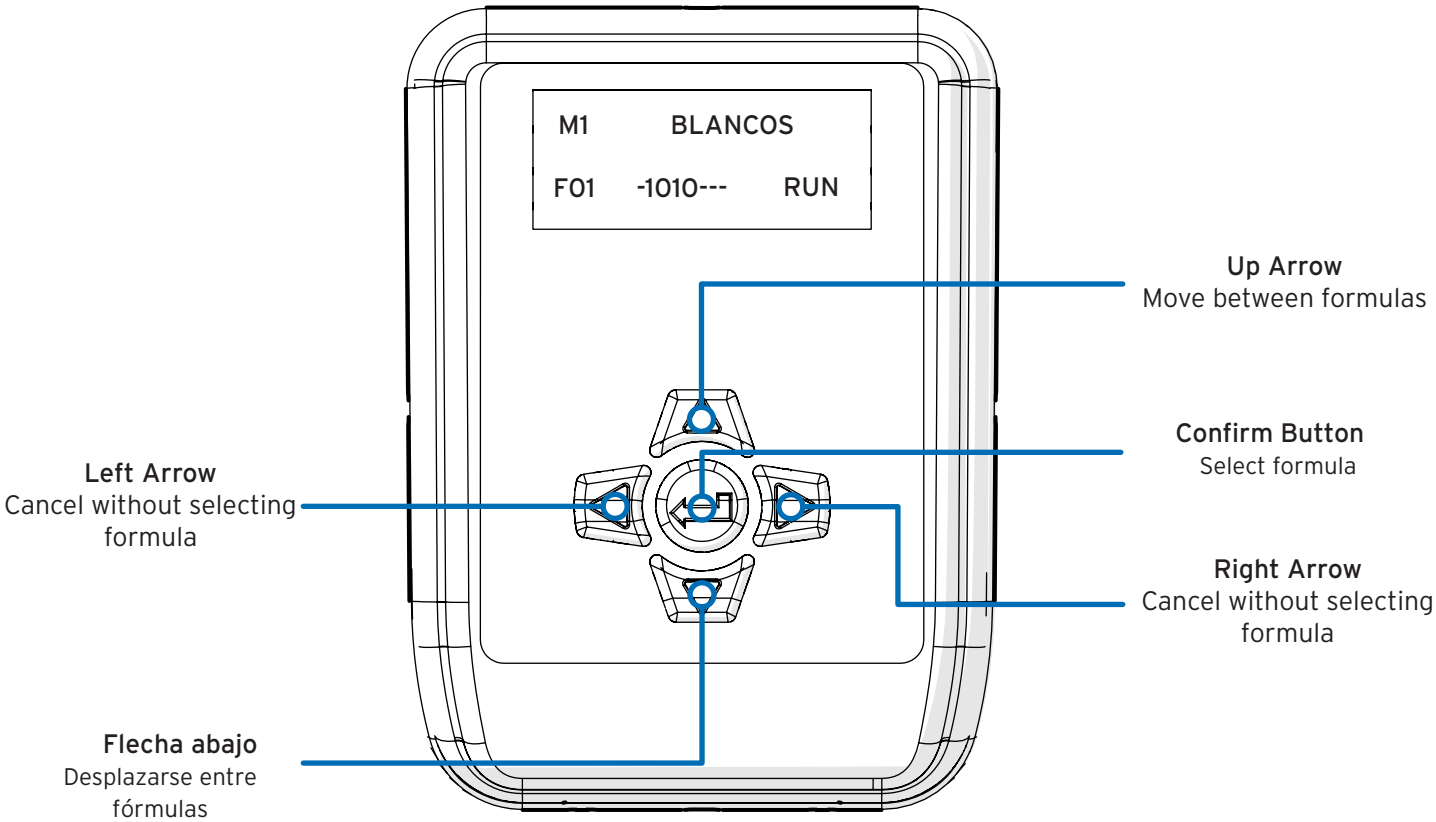

SCREEN BREAKDOWN

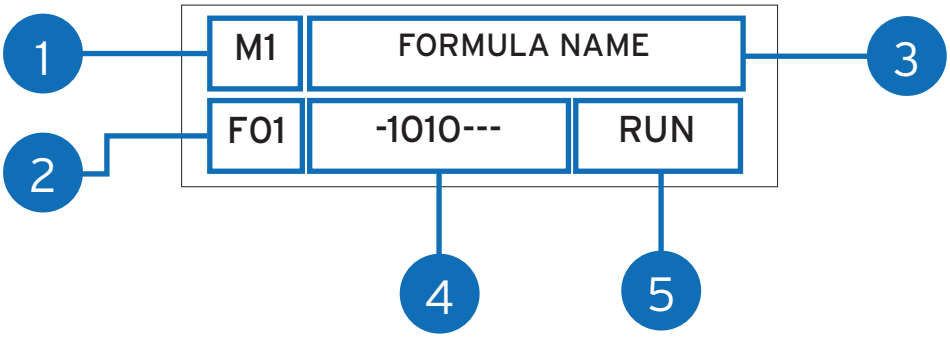

1	Displays the machine number
2	Displays the formula number
3	Displays the name of the formula
4	Displays the programmed phases with the following symbols (-) A dash represents a non programmed phase (0) Displays expected phases **(1)** Displays received phases
5	Shows the run status. **RUN** for running. **END** for completed. **HLD** for held.

FORMULA SELECTOR

1.

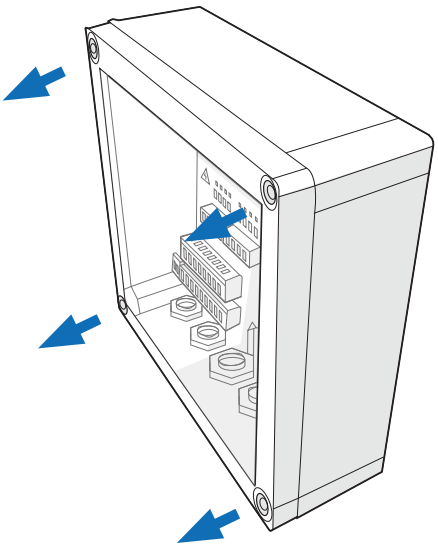

Remove the cover from your Signal Box.

2.

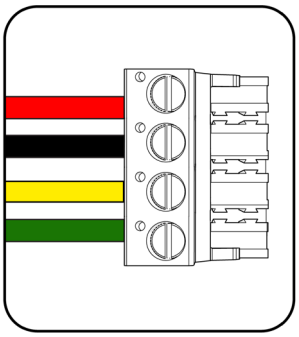

Wire your 4 way connector as shown.

3.

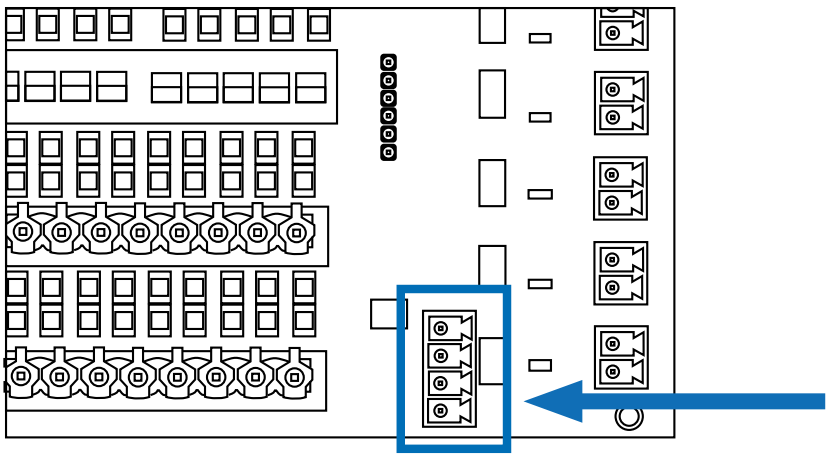

Wire your 4 way connector as shown.

ALERT INFORMATION

Alert Screen	Description
EMERGENCY ALARM	Indicates a critical emergency that requires immediate attention. Examples include 'AIR PRESSURE FAILED!!' or 'EMERGENCY STOP LOCKED!!'
LEAK TEST ALARM	Indicates that the unit has failed the leak test and should be inspected.
WATER TEST ALARM	Indicates a problem during the water test, identifying the specific channel (e.g., 'WATER TEST CHANNEL 2')
WATER FLUSH ALARM	Alerts when there is a timeout during the water flush process, with the affected channel noted (e.g., 'FLUSH TIMEOUT CHANNEL 1').
PRODUCT DOSAGE ALARM	Notifies of a timeout in product dosing.
PRODUCT LOW-LEVEL ALARM	Warns that the product level is low, with the specific product name to be displayed.

CONNECTING YOUR UNIT TO THE INTERNET

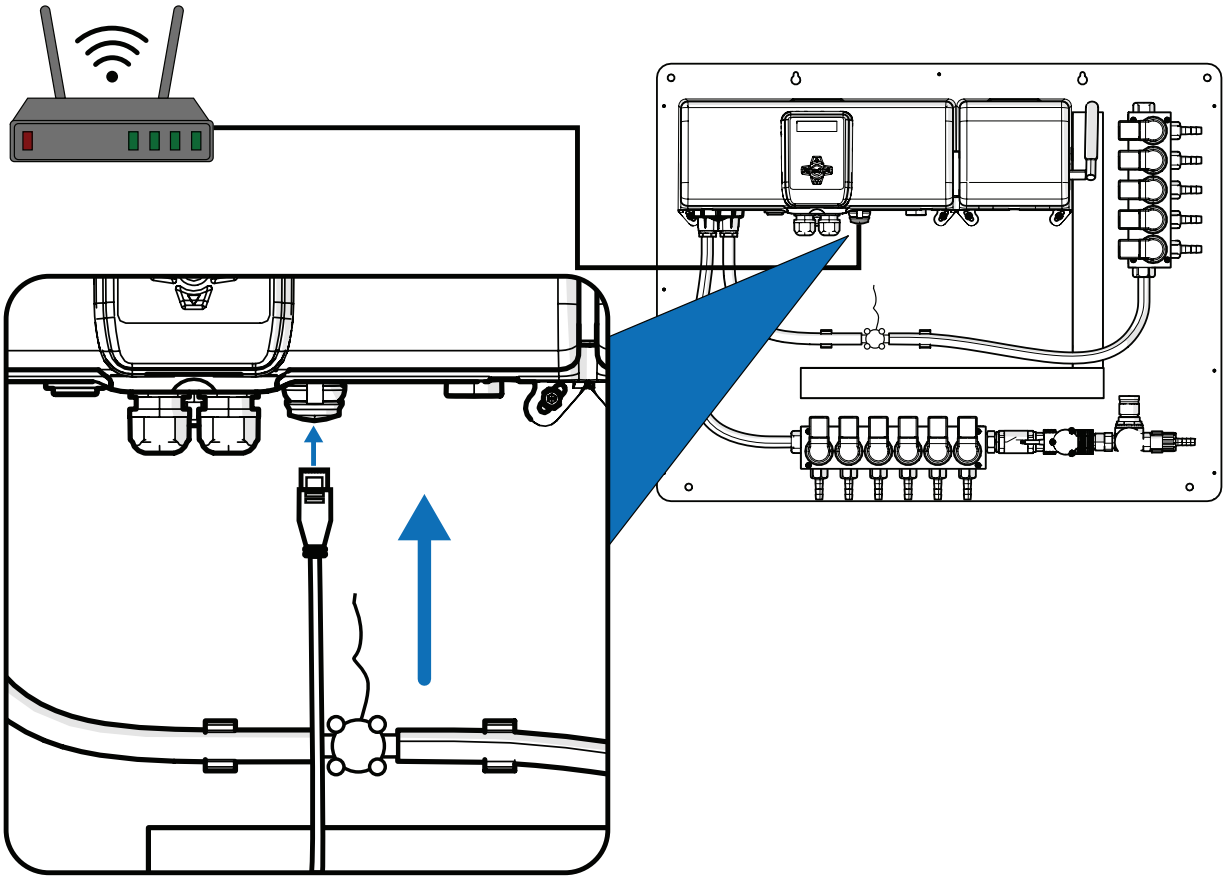

To connect your OPL unit to the internet please use an Ethernet cable and insert into the connector shown here.

MAINTENANCE

ON EACH MAINTENANCE VISIT

Visual Check: Inspect all connections for leaks or product residues.
Alarms: Access the list of alarms via the webserver. If any particular alarm is noted on one or more days, prioritize addressing it.

EVERY 6 MONTHS

Visual check: look for leaks or product residues at any of the connections.
Alarms: By connecting to the webserver, look at the list of alarms of the equipment. If you notice a particular alarm on one or more days, focus on it.
Calibration: calibrate the products again. Thermal changes affect the viscosity of the product and it is possible that the calibration is not adjusted.

EVERY YEAR

If the equipment operates regularly without seasonal shutdowns, ensure that the suction lines are in good condition. It is recommended to replace the suction line for alkaline products to prevent excessive hardening of the tubes and the risk of breakage
If the equipment is only used during the summer season, it is important to fill all lines with water at the end of the season, including the suction lines. This helps minimize the effects caused by contact with chemicals and prevents future problems.

MAIN SCREEN

To enable access to Calibration, login credentials are required. To do this, you must go to the Calibration section on Web Server.

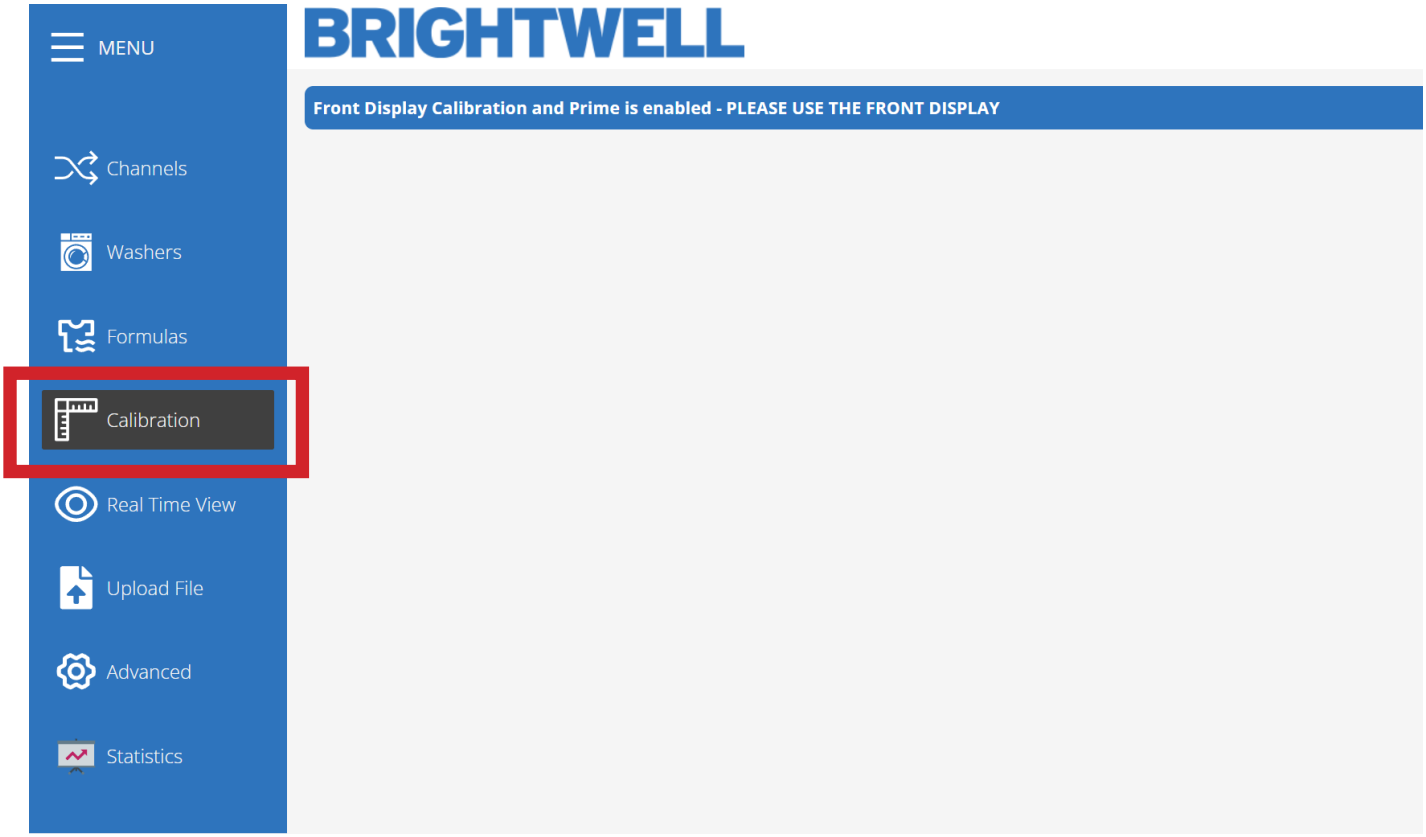

MAIN SCREEN

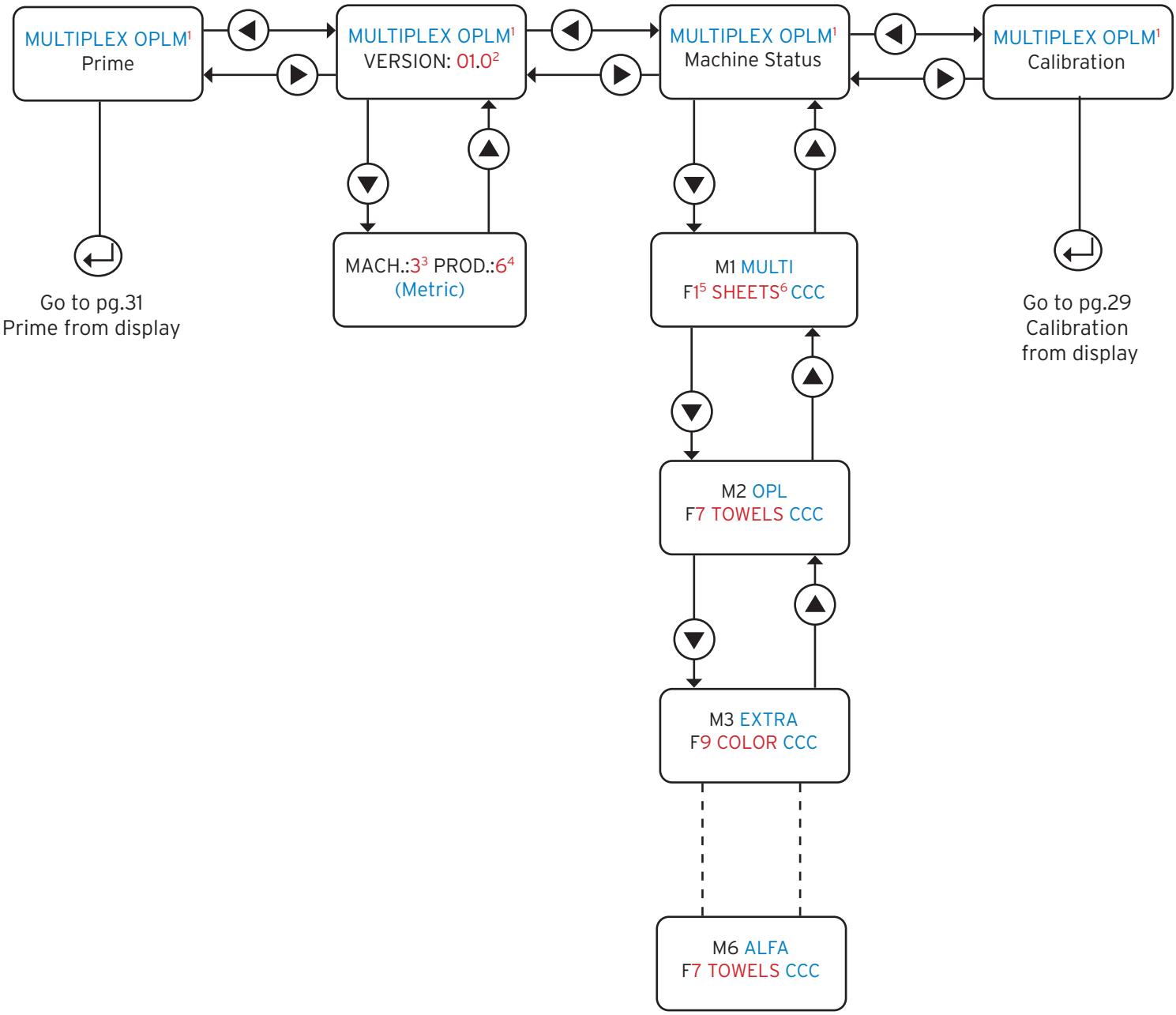

1 Name of unit appears
2 Version of unit appears
3 Number of machines appears
4 Number of products appears
5 Number of formula appears
6 Name of formula appears

SCREEN MAP FOR ALARM POP-UP SCREENS

Emergency alarm

EMERGENCY STOP
LOCKED !!

AIR PRESSURE
FAILED !!

Leak test alarm

LEAK TEST FAILED
CHANNEL 1

Water test alarm

WATER TEST
CHANNEL 1

Water flush alarm

FLUSH TIMEOUT
CHANNEL 1

Product dosage alarm

PRODUCT TIMEOUT
CLORINE[1]

Product low-level alarm

LOW LEVEL
ALKALINE[1]

To stop Emergency alarm, push and hold the central button for 5 seconds. This will stop the dosing process.

To silence other alarms, briefly push the central button.

1 Name of product appears

CALIBRATION FROM DISPLAY

To enter the calibration, you must:

- Logged into Calibration section on Web Server.
- To edit the parameters, you need to press enter and select what you want with the up and down buttons
- Once we start calibrating, you can't go back

WATER

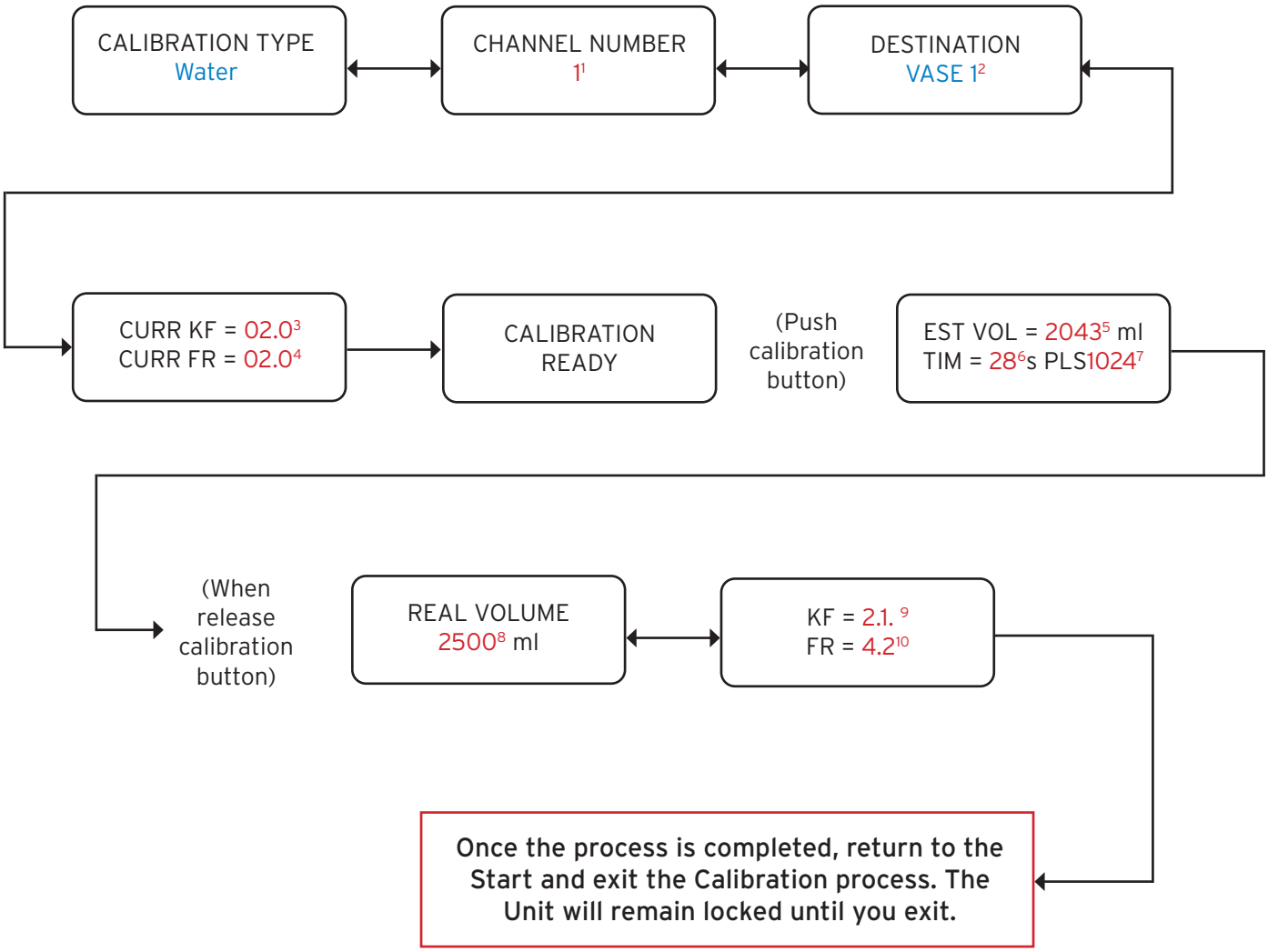

1 Select the number of channel to calibrate
2 Select the name of destination to calibrate
3 Shows the current KF of the channel
4 Shows the current Flow rate of the channel
5 Shows the dosed estimated volume of water
6 Shows the current calibration time
7 Shows the current calibration flow meter pulses
8 Introduce the water real volume of the measured sample
9 Recalculated KF, result of the water calibration
10 Recalculated Flow rate, result of the water calibration

CALIBRATION FROM DISPLAY

PRODUCT

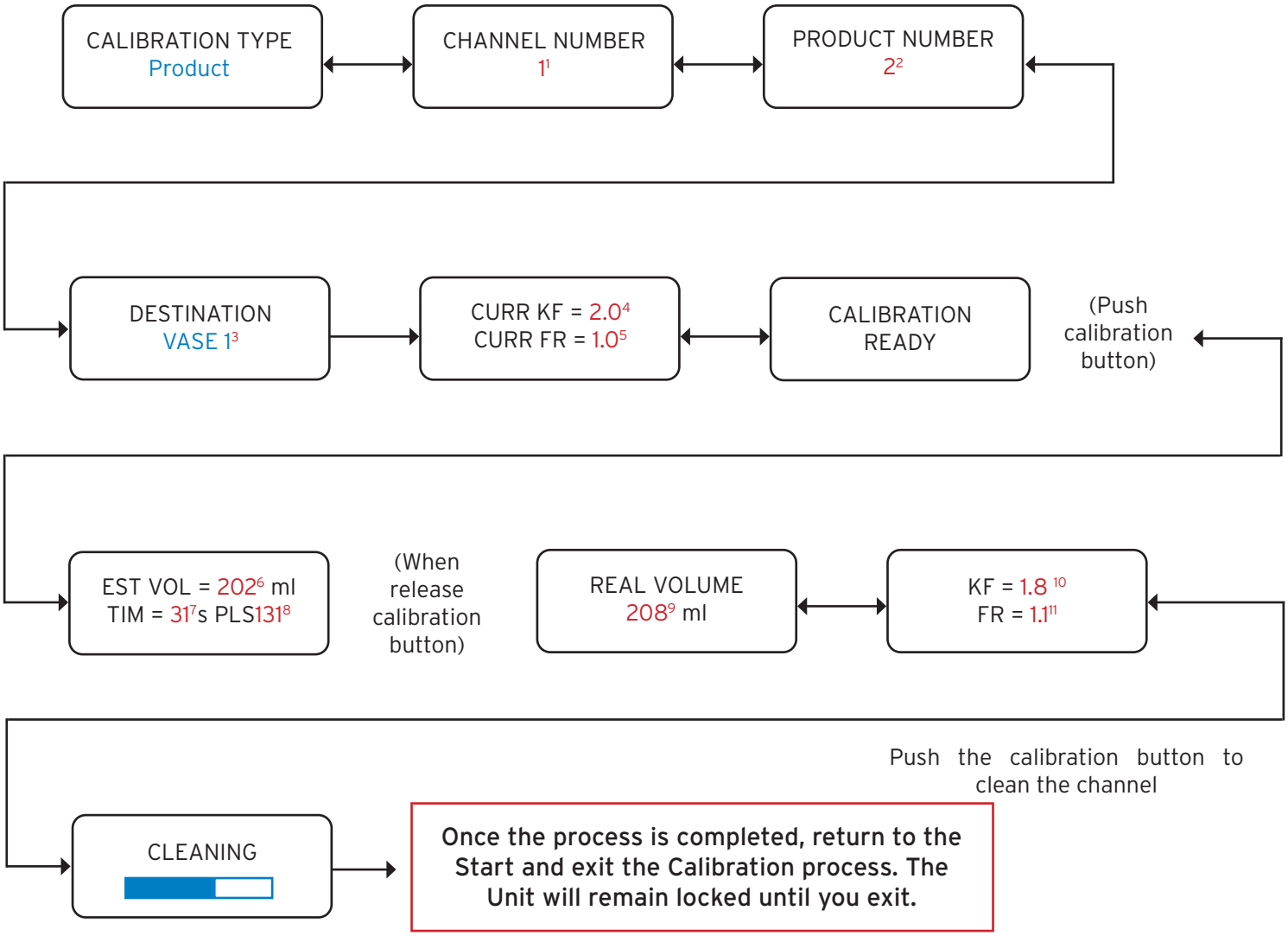

1 Select the number of channel to calibrate
2 Select the number of product to calibrate
3 Select the name of destination to calibrate
4 Shows the current KF of the channel
5 Shows the current Flow rate of the channel
6 Shows the dosed estimated volume of water
7 Shows the current calibration time
8 Shows the current calibration flow meter pulses
9 Introduce the product real volume of the measured sample
10 Recalculated KF, result of the water calibration
11 Recalculated Flow rate, result of the water calibration

PRIME FROM DISPLAY

This feature is unprotected by default. If you wish to protect the Prime process, please check the Advanced Settings section on the Brightwell Web Server User Guide.

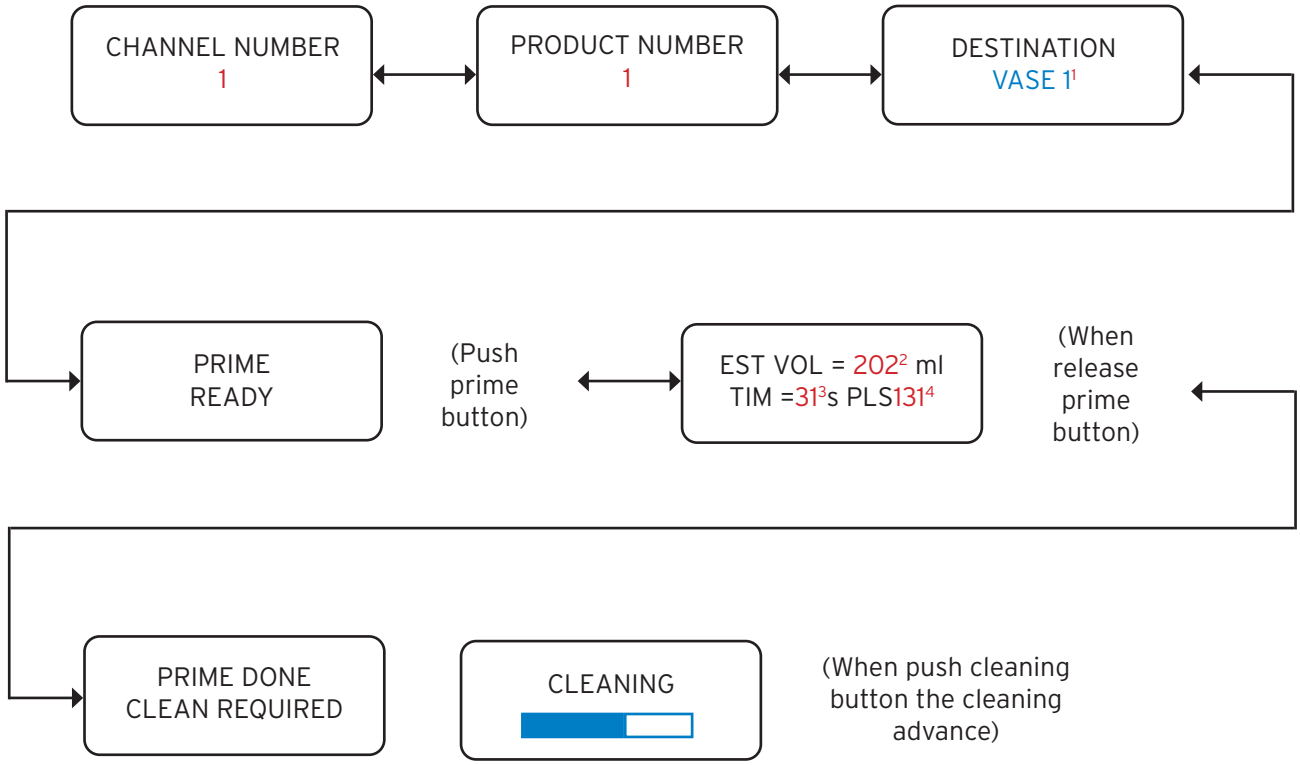

Once the process is completed, return to the Start and exit the Prime process. The Unit will remain locked until you exit.

1 Select the destination name
2 Dosed estimated product volume
3 Time of the product priming
4 Received pulses of the product priming

BRIGHTWELL

T +44 (0) 1273 513566 **E** sales@brightwell.co.uk **W** brightwell.co.uk
Unit 9, Euro Business Park, Estate Road, Newhaven, East Sussex BN9 0DQ